JACOBS™

BRB (Residuary) Ltd

Major Works Programme 2009 - 2012

VAR9/2932 ASSESSMENT PROGRAMME

BE4 ASSESSMENT AND INSPECTION REPORT

Mill Tack Road Bridge
Nr Turriff, Aberdeenshire

BRIDGE REF: IMD/433

December 2010

JACOBS

Document control sheet BPP 04 F8

Client: BRB (Residuary) Ltd
Project: Major Works Programme 2009/2012 Job No: B12360BB
Document Title: VAR9/2932 Assessment Programme
BE4 Assessment: IMD/433

	Originator	Checked by	Reviewed by	Approved by
ORIGINAL Form AA	NAME	NAME	NAME	NAME
DATE 6 Sept 2010	SIGNATURE	SIGNATURE	SIGNATURE	SIGNATURE
Document Status				

REVISION Form BA	NAME	NAME	NAME	NAME
DATE 22 Dec 2010				
Document Status				

REVISION	NAME	NAME	NAME	NAME
DATE	SIGNATURE	SIGNATURE	SIGNATURE	SIGNATURE
Document Status				

JACOBS

Contents

1 General Description and Structural Details

1.1 Introduction

Jacobs was appointed by BRB(R) to conduct the site survey at IMD/433 in sufficient detail to provide data for BE4 assessment work.

Metal samples were not taken from this bridge; the date of reconstruction (1938) and welding of the parapet posts to the edge girders indicate that the girders are constructed from mild steel. Structural Soils Ltd. excavated a trial pit in the road over the first internal girder from the north edge in order to confirm girders dimensions and infill properties.

1.2 Location and General Description

Bridge IMD/433 carries an unclassified road over the track bed of the former Macduff to Inveramsay railway about 7 km south north of Turriff in Aberdeenshire.

The road is a single carriageway 2.74m wide with 0.77m wide soft verges both sides (photos 3&4). The national speed limit of 60mph applies although practical speeds are severely limited by the road geometry. Only occasional light vehicles were observed on the road at the time of inspection.

The OS grid reference is NJ728573.

The bridge deck was reconstructed in 1938; the abutments probably date from the opening of the railway in 1860.

1.3 Construction type

The structure is a single square span overbridge with a clear span of 4.57m (15' – 0") between abutment faces (Photos 1 and 2).

The bridge comprises of six longitudinally spanning RSJs, spaced at 3ft (0.914m) centres. Pre-cast concrete jack arches span between the bottom flanges of the girders. There is concrete infill covering the girders and jack arches. All girders are supported on granite bearing stones. Additional angles are riveted to the top flange of the edge girders to retain the concrete infill and support the parapet metal posts.

The parapets are timber palings supported on the vertical metal angles that are welded to the edge girders.

The abutments and wingwalls are constructed from squared large granite blocks, regularly coursed.

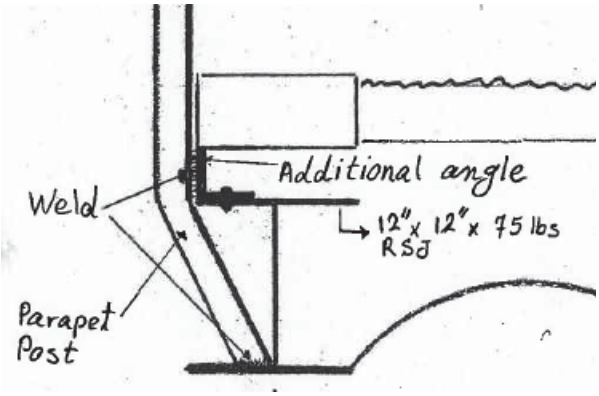

Edge girder details

2 Existing Information Search

2.1 Services Search

Documentation obtained by Structural Soils Ltd is included in Appendix B.

2.2 SI Results

A trial pit was excavated as part of the survey located at the edge of the carriageway to expose the top flange of the first internal girder from the north.

Data on the trial pit is included in Appendix C.

2.3 Existing Drawings

There are no existing drawings for the reconstructed bridge.

3 Structure Condition

3.1 General

The survey and inspection for BE4 assessment were undertaken on Monday 12 July 2010. Weather conditions were partially cloudy with temperature about 16°C.

Parking was available on the soft verge to the south east of the bridge. Access to the formation was gained through a gap in the fence and down the steep slope at the back of the north west wingwall.

3.2 Main superstructure

3.2.1 Girders

The girders are in fair condition. There is some surface corrosion and loss of section, estimated to be a maximum of 5% of the bottom flange thickness to all girders. There is also some flaking at the east end of the north edge girder about 2 to 3 inches from concrete bearing stones (photo 8). There is flaking corrosion on the exposed face of the north edge girder. Green paint on the girders is still present but it is largely ineffective (photo 5).

3.2.2 Concrete jack arches

The pre-cast concrete jack arches are in good condition with no visible cracking or dampness (photo 5).

3.3 Abutments

The abutments are constructed from squared large granite blocks, regularly coursed. The quoins are constructed from red sandstone blocks. The abutments are in good condition with no significant defects (photos 6 and 7). They are considered to be adequate for full BE4 Construction and Use loading.

3.4 Wingwalls

The wingwalls lie parallel with the road and are constructed from regularly coursed squared granite blocks (photos 6 and 7). They are generally in good condition. There is a 2-3mm wide crack running through the mortar courses, starting from top of the north west parapet close to the east end and stretching vertically to near embankment level at foot of the north west wingwall.

3.5 Parapets

The parapets on the bridge deck are timber paling fences supported by metal angles that are welded to the edge girders. They are generally in good condition though with some paint loss throughout.

The parapets over the wingwalls are constructed from regularly coursed squared granite blocks. They are generally in very good condition. One coping stone at the west end of the north west parapet is slightly dislocated (photo 9).

3.6 Formation

The formation is overgrown. A 1.2m high brick wall has been constructed between the abutments at the south end of the bridge opening (photo 1).

3.7 Road Surface

The road surface is in good condition (photos 3&4).

4 Assessment to BE4

4.1 Structural Parts checked to BE4

The following parts of the bridge were checked to BE4:

- Internal girders: Bending and shear for dead and live load
- Edge girders: Bending and shear for dead load.

The abutments were assessed qualitatively.

4.2 Methodology

Capacities of the girders were calculated using estimates of reduced section sizes where corrosion is present. A general condition factor was not applied.

The bridge complies with the construction types listed in BE4 Clause 303 (c) (i.e Jack arches), which allowed the quick assessment method to be used on the internal girders.

The four internal girders attracting live loading were checked for full 24 ton C&U loading.

The concrete deck construction offers restraint to the top flanges of the internal girders against lateral torsional buckling; therefore effective length was taken as zero.

The edge girders are separated from the carriageway by an intervening girder and therefore are not required to be assessed for live loads. They were checked for dead load effects only.

Review of the adequacy of the jack arches were based upon the empirical method described in Bridgeguard 3 Current Information Sheet No 22 (Pro-forma for the empirical assessment of brick, masonry and concrete jack arches and associated ties.)

The abutments were assessed qualitatively.

4.3 Results

Element: **Internal girders under full carriageway loading (mid-span)**

Action	Location	Dead load effect	Full C&U load effect	Total load effect	Assessed resistance	Live load capacity
Bending	Mid-span	9.4 ton.ft	14.5 ton.ft	23.9 ton.ft	101.2 ton.ft	Full C&U loading
Shear	Support	2.5 tons	10 tons	12.5 tons	33.2 tons	Full C&U loading

Element: **Edge girder (no live load imposed).**

Action	Location	Dead load effect	Full C&U load effect	Total load effect	Assessed resistance	Load capacity
Bending	Mid-span	5.39 ton.ft	0 ton.ft	5.39 ton.ft	85.23 ton.ft	Pass
Shear	Support	Less onerous than internal girder shear conditions				Pass

Element: **Jack Arches and Tie Bars**

The empirical assessment of the jack arches indicates one non-compliance, namely: the tie bars are located within the crown of the external jack arches.

Element: **Substructure**

The abutments show no signs of structural distress. By qualitative assessment, they appear to be satisfactory for Full C&U loading.

5 Conclusions and Recommendations

The assessment demonstrates that the main girders are capable of sustaining full C&U loading in accordance with BE4 requirements even after making due allowance for corrosion.

The empirical assessment of the jack arches indicates a non-compliance with the tie bars being located within the crown of the external jack arches. There is however adequate tie bar provision and there are no concerns about corrosion as they are protected by the concrete. There is also concrete infill over the jack arches therefore the arch/tie/fill configuration is unlikely to lead to rotation of the edge girders. There are no indications of any movement having occurred. It is therefore concluded that the jack arches are adequate for loading commensurate with the capacity of the girders.

The paint system is breaking down particularly on the exposed webs of the edge girders. Early maintenance would be beneficial to prevent further deterioration.

The bridge deck parapets comprise simple wooden paling fences, which would have negligible vehicle containment capacity. A coping stone at the west end of the north parapet has been dislocated and needs re-setting.

Appendix A Photographs

1. North elevation

2. South elevation

3. Road looking East

4. Road looking west

5. Soffit and north edge girder

6. East abutment and North east wingwall

7. West abutment and North west wingwall

8. East end of north edge girder

9. Dislocated coping stone at north west parapet

10. Trial pit at north verge mid-span

Appendix B Service search

95 Kilbirnie Street,
Glasgow G5 8JD.

Our Ref: SC/10.06.10/MS075/1/101000

Your Ref: EQ/XTCAE577

Date: 10 June 2010

, .
National One Call
1 Mill Place
Mill Road Industrial Estate
Linlithgow Bridge
West Lothian, EH49 7TL.

Fax: ~
Email: ~

24 hour gas escape number 0800 111 999

Calls will be recorded and may be monitored.

Dear Sir / Madam,

Re: Proposed Works Enquiry at: Railway Structure Mains Of Blackton, South Of Macduff.

Scotland Gas Networks acknowledges receipt of your notice of your intention to carry out work at the above location.

According to our records Scotland Gas Networks has no gas mains in the area of your enquiry.

Gas pipes owned by other Gas Transporters and also privately owned may be present in this area. Information with regard to such pipes should be obtained from the owners.

If you have any further enquires please contact the Telephone number below.

Yours faithfully,

[redacted]
Admin Assistant
0141 418 4093

Scotland Gas Networks
Registered in Scotland No SC264065
Registered Office: Inveralmond House, 200 Dunkeld Road, Perth PH1 3AQ

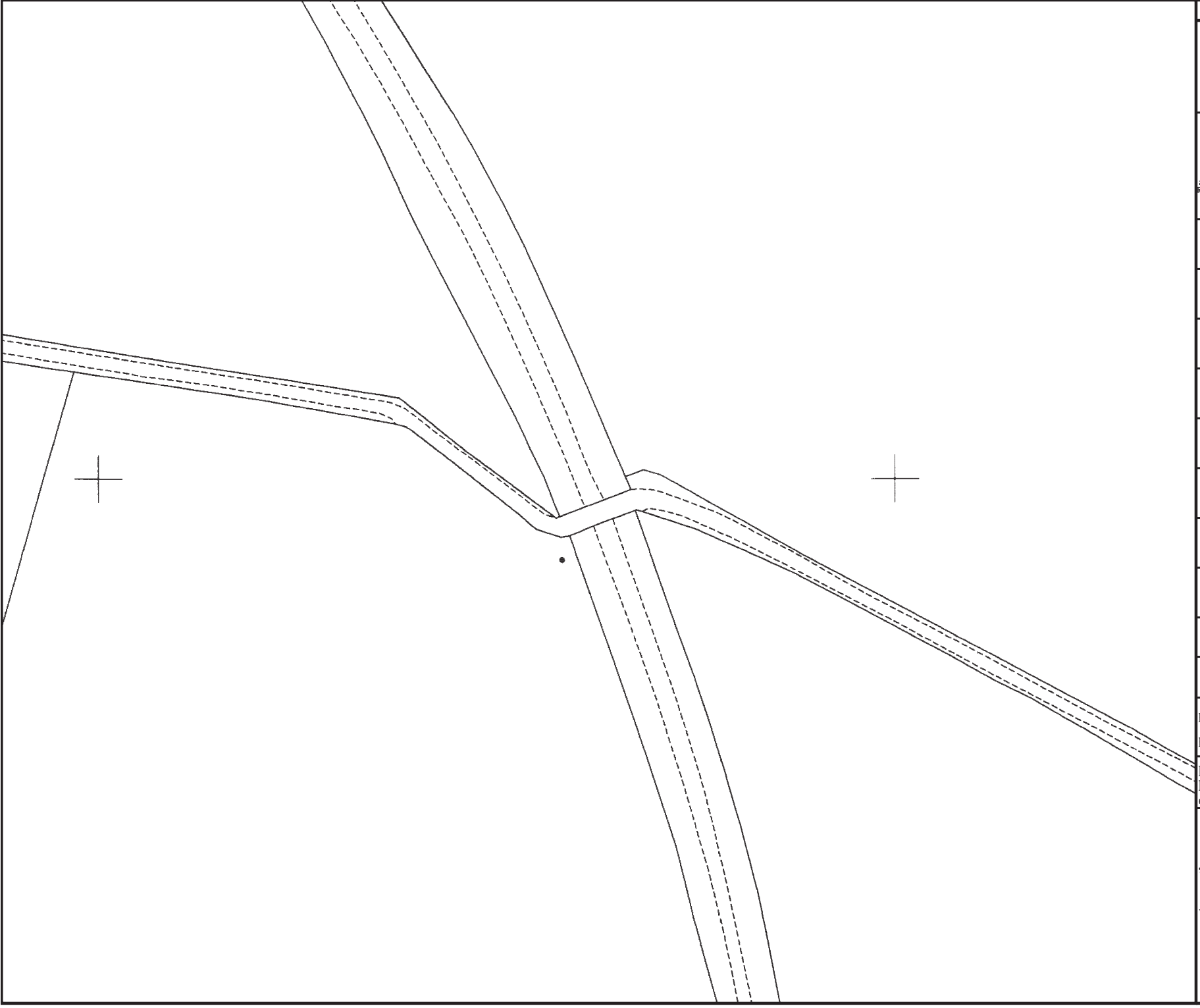

Scottish and Southern Energy

EQ/XTCAE577

Mains of Blackton

NORTH EAST DISTRICT

Tel: 01224 667200

All Voltages

Scale : 1:1250

10/06/2010

NJ72725719

UNCONTROLLED COPY
Subject to revision without notice.

NORMAL DEPTH TO THE TOP OF THE CABLE WHEN LAID.

	services	lv	hv	ehv
FOOTPATH	0.40m	0.45m	0.60m	0.75m
ROAD CROSSING	0.65m	0.60m	0.75m	0.90m

l.v./services –upto 1000V
h.v. –over 1000V to 11,000V
e.h.v. –22,000V and 132,000V

WARNING

There may have been subsequent alterations to the surface levels. Trial holes must be taken to determine positions and depths of cables. HS (G) 47 Booklet from the Health and Safety Executive – Avoiding Danger from Buried Cables – should be consulted before commencing excavation work.
(available from HMSO)

WHEN WORKING IN THE VICINITY OF OF OVERHEAD LINES THE HEALTH AND SAFETY GUIDANCE NOTE GS6 SHOULD BE CONSULTED.
(AVAILABLE FROM HMSO)

For plots at 1:10000 scale there maybe more information visible at 1:500 scale. Responsibility is with the user of this map to check no further information exists at 1:500 scale.

Watch it!

Safety advice brought to you by
Southern Electric Power Distribution plc and
Scottish Hydro Electric Power Distribution Ltd

These notes are intended to help all those who have to work in the vicinity of electrical apparatus. Employers have a legal obligation to ensure that their operatives are fully instructed in the correct procedures.

The Electricity at Work Regulations 1989 impose health and safety requirements upon employers, employees and self-employed persons with respect to electricity at work. The regulations impose restrictions on persons being engaged in work activities on or near live conductors.

Regulation 14 requires that: "No person shall be engaged in any work activity on or near any live conductor (other than one suitably covered with insulating material so as to prevent danger) that danger may arise unless:

- it is **unreasonable** in all circumstances for it to be dead; and
- it is **reasonable** in all circumstances for him to be at work on or near it while it is live; and
- suitable precautions (including where necessary the provision of suitable protective equipment) are taken to prevent injury."

The purpose of the regulations is to require precautions to be taken against the risk of death or personal injury from electricity in work activities.

Publications

The Health and Safety Executive have produced a document entitled 'Avoiding Danger from Underground Services', and the Appendix 1 deals specifically with electric cables. Copies are available from HMSO's Accredited Agents and good booksellers, Ref. HS (G) 47.

Copies of Health and Safety Guidance note GS 6 relating to safe working in proximity to overhead lines, are available from HMSO Head Offices of the Federation of Civil Engineering Contractors and the National Federation of Building Trades Employers.

Note

In situations of emergency or danger, or where the advice contained in these notes cannot be followed, you must consult Scottish and Southern Energy plc immediately. Tel. 08457 708090 for southern England or 0800 300999 for Scotland.

Additional copies of these "Watch it!" leaflets can be obtained from our Mapping Services office upon request. Tel. 01256 337294, or Fax 01256 337295.

You must read and accept the following safety notes as part of the contract to receive our network plans. You will have the option to print these and issue them to site staff.

Watch it! - Working in the vicinity of underground cables.

Our plans show the positions and normal depths for the buried cables and pipes at the time when they were installed. However, alterations to road alignments surface levels and buildings may have occurred subsequently without our knowledge. If you discover plant or cables that are not marked or incorrectly marked, then you are required to contact us as soon as possible to give us the opportunity to amend our plans.

These plans show the equipment owned by Scottish and Southern Energy plc. There may be other privately owned plant in the area, which is outside of our control. You should always check with the Local Authority, National Grid Company, Department of the Environment, other Electricity Companies and other utilities before proceeding.

It is not intended that the issue of these plans will absolve either party from their obligation under any of the acts that control digging in the public highways.

Supplies To Properties, etc.

The location of cables supplying individual properties, street lighting, traffic signs, telephone kiosks etc. are not always shown on the plans. You should assume that each property, streetlight etc. will have its own supply cable.

Major Circuits

Where our plans indicate the presence of cables with a voltage exceeding 11,000 volts, you are advised to contact our local depot (telephone number is on the plans), before commencing any excavations within the vicinity of these cables. These major transmission circuits form an extremely important link in Scottish and Southern Energy's network, and damaging or modifying these circuits is a major and costly undertaking. Any development should therefore be designed to allow these circuits to remain undisturbed and accessible in their present location.

For your own and your workmates' safety, please follow the **do's** and **don'ts** listed below:

- ✓ **do** make sure you have plans of the underground cables in the area **before** any excavation work starts. Remember that some cables may not be shown on plans. If carrying out emergency work, excavate as though there are buried live cables in the vicinity.
- ✓ **do** use a cable locator to determine the position of existing cables in the work area. The positions should be marked and tests made as work proceeds. **If in doubt, get advice from your supervisor.**
- ✓ **do** ask for a cable to be made dead if it is buried in concrete.
- ✓ **do** watch for signs of cables as work progresses. Note any marker-tape or cable-cover, which may be exposed.

- ✓ **do** backfill carefully, using stone-free soil around the cables, replacing marker-tapes and / or covers.
- ✓ **do** notify us immediately if you accidentally damage our cables. Arrange to keep people well clear of a cable that has been damaged until we have confirmed it has been made safe.
- ✓ **do** make sure before starting to demolish a building that all cables have been disconnected. We welcome prior notice of the intention to demolish buildings. This enables us to ensure that the site has been made safe electrically.
- ✓ **don't** operate a bulldozer, scraper, dragline or excavator; unless you are satisfied that there are no buried cables in the working area.
- ✓ **don't** use picks, pins, forks or pointed instruments in soft clay or soil when cables are present. Exercise extreme caution where such instruments are used to free lumps of stone, or break up firmly compacted ground. **Never** throw a fork or sharp instrument into the ground.
- ✓ **don't** dig trial holes over the indicated route of the cable. Excavate alongside instead.
- ✓ **don't** use exposed cables as a convenient step or handhold.
- ✓ **don't** handle or attempt to alter the position of any cable.

Remember that a damaged cable may cause extensive loss of supplies, make expensive repairs necessary and cause serious or even fatal injury.

If effective measures are not adopted to protect our equipment, we will take steps to recover the cost of any damage caused. Persons causing damage resulting in loss of supply to customers can be held legally responsible for any claims made by those customers. Promptness in reporting an incident will minimise costs.

In most cases it is not practicable to make cables dead without interrupting supplies to our customers. But given adequate notice, we will wherever possible, give advice regarding special precautions which may be necessary on any site where particular problems are likely to be encountered. The right is reserved to make a charge for this service.

Electricity cables can exist anywhere - under paths or roads, in gardens or driveways, on new housing or industrial development sites or even farmland.

Watch it! - Working in the vicinity of overhead lines

For your own and your workmates' safety, please follow the **do's** and **don'ts** listed below

- ✓ **do** carefully note the position of all overhead lines before commencing work.
- ✓ **do** co-operate with us during planning and sitework stages.
- ✓ **do** follow the advice given in HSE Guidance Note GS 6 when siting barriers, goal posts, bunting etc.
- ✓ **do** keep overhead lines in view when moving scaffolding or machinery and take special care when felling or lopping trees.
- ✓ **do** remember that the raising or slewing of a crane or excavator jib may cause danger when operating near an overhead line.
- ✓ **do** avoid any machinery that is in contact with an overhead line until we confirm that conditions are safe.
- ✓ **do** warn others to keep well clear.
- ✓ **don't** drive a high vehicle below an overhead line when an alternative route is available.
- ✓ **don't** raise the bed of a tipper lorry beneath an overhead line or drive under the line with the body of the vehicle raised.
- ✓ **don't** steady any suspended load until you are satisfied that there is no danger from overhead lines.
- ✓ **don't** handle or use scaffold platforms, poles, pipes or ladders unless they are at a safe distance from overhead lines.
- ✓ **don't** transport long objects beneath overhead lines, unless they are carried in a horizontal position.
- ✓ **don't** approach or touch any broken or fallen overhead lines.

Always remember that:

- Electricity can jump gaps.
- Contact or near contact with a crane jib, scaffold or ladder can cause a discharge of electricity with a risk of fatal or severe shock and burns to any person in the vicinity.

If effective measures are not adopted to protect our equipment, we will take steps to recover the cost of any damage caused. Persons causing damage resulting in loss of supply to customers can be held legally responsible for any claims made by those customers. Promptness in reporting an incident will minimise costs.

In most cases it is not practicable to make overhead lines dead without interrupting supplies to customers. However, provided adequate notice is given, then we will, whenever possible, give advice regarding special precautions which may be necessary on site where specific problems may be encountered. The right is reserved to make a charge for this service.

Appendix C Trial pit log

STRUCTURAL SOILS

TRIAL PIT LOG

Contract:	Client:	Trialpit:
BE4 BD21 Bridges	**Jacobs**	**IMD/433 TP01**

Contract Ref:	Date:	Ground Level	Co-ordinates:	Sheet:
761587	**12.07.10**	**---**	**---**	**1** of **1**

Samples and In-situ Tests				Water	Backfill	Description of Strata	Depth (Thickness)	Material Graphic Legend
Depth	No	Type	Results					
						MADE GROUND: Tarmac.	0.05	
						MADE GROUND: Concrete with 5mm rebar.	0.23	
						Trial pit terminated at 0.23m depth on steel girder.		

Plan (Not to Scale)

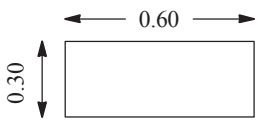

General Remarks

1. Trial hole carried out in north verge.
2. Service plans checked and postion CAT scanned prior to excavation.
3. No groundwater encountered during excavation.
4. Trial hole backfilled and reinstated to local authority specification.

All dimensions in metres | Scale: **1:25**

Method Used:	Plant Used:	Logged By:	Checked By:
Hand dug	**Hand tools**	[redacted]	

Appendix D Form AA

FORM 'AA' (BRIDGES) **GC/TP0356**

Appendix: 4

ELR/ Bridge No IMD/433 Issue: 1

Revision: B (Nov 2000)

APPROVAL IN PRINCIPLE FOR ASSESSMENT (BE4)

Bridge/Line Name: **Mill Tack Road Bridge / Inveramsay to Macduff**

ELR/Bridge No. **IMD/433**

Brief Description of Existing Bridge:

(a) Span Arrangement

A single span overbridge with a clear span of 15ft (4.57m) between abutment faces and no skew.

(b) Superstructure Type

The bridge comprises of six longitudinally spanning RSJs, spaced at 3ft (0.914m) centres. Pre-cast concrete jack arches connect the bottom flange of the girders. The girders are surrounded with mass concrete infill.

(c) Substructure Type

The abutments, wingwalls and pilasters are constructed from squared large granite blocks, regularly coursed. The girders are supported on a course of concrete bearing blocks 50 -75mm thick raising the girders above the stonework.

(d) Planned highway works/modifications at this site

None

(e) Road designation class and whether classed as a heavy load route

The road is a single carriageway 2.74m wide with 0.77m wide soft verges both sides. The national speed limit of 60mph applies although practical speeds are severely limited by the road geometry. Principal use is by light vehicles. It is unlikely to be a heavy load route.

(f) Any other requirements

None

APPROVAL IN PRINCIPLE FOR ASSESSMENT (BE4)

Assessment Criteria

(a) Loadings and Speed

Section sizes used to calculate dead loads and for determining structural capacity obtained from site measurements. (See Jacobs report "VAR9-2932 Assessment Programme – Assessment and Inspection Report – Bridge Ref.: IMD/433"). Vehicle loading obtained from and applied in accordance with BE4. Standard BE4 loading representative of 24 ton vehicles will be assessed.

Codes to be used

BE4 - "The Assessment of Highway Bridges for Construction and Use Vehicles" Ministry of Transport, 1967 (with amendments to 1969).

BS 153: Parts 3B & 4: 1958 "Steel Girder Bridges" British Standards Institution (with amendments to 12 Sept 1968).

(b) Proposed Method of Structural Analysis

Capacities of the girders will be calculated using estimates of reduced section sizes where corrosion is present. A general condition factor is not applied.

The bridge complies with the construction types listed in BE4 Clause 303 (c) (i.e. Jack arches), which will allow the quick assessment method to be used on the internal girders.

The four internal girders attracting live loading will be checked for full 24 ton C&U loading.

The concrete deck construction offers restraint to the top flanges of the internal girders against lateral torsional buckling; therefore effective length will be taken as zero.

The edge girders are separated from the carriageway by an intervening girder and therefore are not required to be assessed for live loads. They will be checked for dead load effects only. They are partially restrained by the concrete, held by tie-bars and have extra stiffening from the edge angles. Their effective length will be conservatively taken as half their effective span.

Review of the adequacy of the jack arches will be based upon the empirical method described in Bridgeguard 3 Current Information Sheet No 22 (Pro-forma for the empirical assessment of brick, masonry and concrete jack arches and associated ties.)

The abutments will be assessed qualitatively.

FORM 'AA' (BRIDGES)

GC/TP0356
Appendix: 4
Issue: 1
Revision: B (Nov 2000)

ELR/ Bridge No IMD/433

APPROVAL IN PRINCIPLE FOR ASSESSMENT (BE4)

Senior Civil Engineer's Comments

.....

.....

NONE

.....

.....

.....

Proposed Category for Independent Check ..... 1 .....

Superstructure ..... 1 .....

Substructure ..... 1 .....

Name of Checker suggested if Cat 2 or 3 ..... N/a .....

Category 1

The above assessment, with amendments [redacted]

Signed [redacted]
Title
Date

Category 2 and 3

The above assessment, with amendments shown, is approved in principle:

Signed .....
Title ..... N/a .....
Date .....

Signed .....
Title ..... N/a .....
Date .....

Appendix E Form BA

FORM 'BA' (BRIDGES)

GC/TP0356
Appendix: 4
Issue: 1
Revision: A (Dec 2005)

ELR/ Bridge No IMD/433

CERTIFICATION FOR ASSESSMENT CHECK

Assessment Group: **Jacobs Engineering UK Ltd**

Bridge/Line Name: **Mill Tack Road Bridge / Inveramsay to Macduff**

Category of Check: **1**

ELR/ Bridge No: **IMD/433**

We certify that reasonable professional skill and care have been used in the assessment of the above structure with a view to securing that:

(1) It has been assessed in accordance with the Approval in Principle as recorded on Form AA approved on 10 September 2010.

(2) It has been checked for compliance with the following principal British Standards, Codes of Practice, BRB (Residuary) Limited technical notes and Assessment standards:

BE4 - "The Assessment of Highway Bridges for Construction and Use Vehicles" Ministry of Transport, 1967 (with amendments to 1969).

BS 153: Parts 3B & 4: 1958 "Steel Girder Bridges" British Standards Institution (with amendments to 12 Sept. 1968).

List any departures from the above and additional methods or criteria adopted, with reference and justification for their acceptance.

None

Category 1

Name Signature Date

[redacted] Assessor

Assessment Checker

Authorised signatory of the firm of Consulting Engineers to whom Assessor/Checker is responsible.

FORM 'BA' (BRIDGES)

GC/TP0356
Appendix: 4
Issue: 1
Revision: A (Dec 2005)

ELR/ Bridge No IMD/433

CERTIFICATION FOR ASSESSMENT CHECK

Category 2 and 3 (Note: Category 1 check must also be signed)

(a) Assessment

Name	Signature	Date	
			Assessor
			Assessment Checker
			Authorised signatory of the firm of Consulting Engineers to whom Assessor/Checker is responsible.

(b) Check

Name	Signature	Date	
			Assessor
			Assessment Checker
			Authorised signatory of the firm of consulting engineers to whom Assessor/Checker is [redacted]sible.

This Certificate is accepted b[redacted].....

FORM 'BAA' (BRIDGES)

GC/TP0356
Appendix: 4
Issue: 1
Revision: A (Dec 2005)

ELR/ Bridge No IMD/433

CERTIFICATION FOR ASSESSMENT CHECK

Notification of Assessment Check

Assessment Group	Jacobs Engineering UK Ltd
Bridge Name/Road No.	Mill Tack Road / unclassified
Line Name	Inveramsay to Macduff Line
ELR Code/Structure No.	IMD/433

The above bridge has been assessed and checked in accordance with Standards which are listed on the appended Form BA. A summary of the results of the assessment in terms of capacity and restrictions is as follows:-

STATEMENT OF CAPACITY

Main girders carrying carriageway	Full C&U loading: 24 ton vehicle train
Parapet edge girders (No BE4 live load imposed)	Pass
Jack arches and ties*	Pass
Substructure (qualitative assessment)	Full C&U loading

Recommended Loading Restrictions

None.

Description of Structural Deficiencies and Recommended Strengthening

The empirical assessment of the jack arches indicates a non-compliance in that the tie bars are located within the crown of the external jack arches. The arch/tie/fill configuration is unlikely to lead to rotation of the edge girders and there are no indications of any movement having occurred. It is therefore concluded that the jack arches and ties are adequate for loading commensurate with the capacity of the girders.

Maintenance painting of the edge girders is recommended.
A coping stone at the west end of the north parapet needs re-setting.

Name Signature Date

[redacted]

Appendix F Calculations

CALCULATION COVER SHEET

Jacobs
Reading

Project Title: BRB (Residuary) Ltd - Major Works2009/2012(LISTED BRIDGES)		Calc. No.:	206
Job No: B12360BB		File:	R17
Project Manager	[redacted]	Subject:	**IMD/433**
Designer			Mill Tack Road Bridge, Nr Turriff, Aberdeenshire
Project Group	31600		BE4 Assessments

	Total Sheets	Made by	Date	Checked by	Date	Reviewed by	Date		
Original	11	CB	Dec-10	JR	Dec-10				
Rev									
Rev									
Rev									
Rev									
Rev									

Superseded by Calculation No. Date

For design criteria, refer to Approval in Principle (Form AA) document

BE4 Assessment of IMD/433 based on Jacobs site survey of July 2010 and the method of structural analysis set out in the Form AA.

Cross Section and Element Dimensions

Jacobs BE4 site survey 07/10

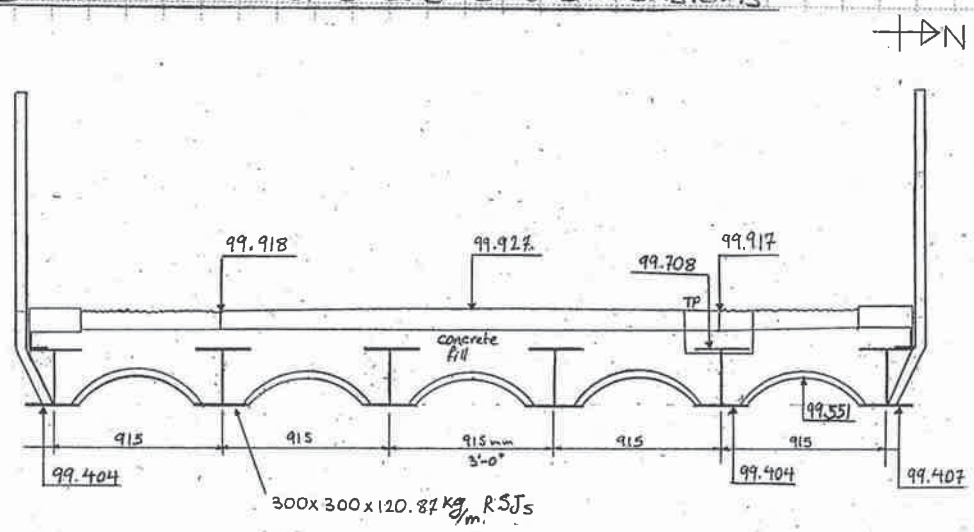

Section at mid-span

MAIN BEAMS

RSJ sections of 300 × 300 × 120.87 kg/m

Section Dimensions

BCSA Historical Structural Steelwork Handbook Table 8.6

mass/ft = 81.22 lbs/ft ✓

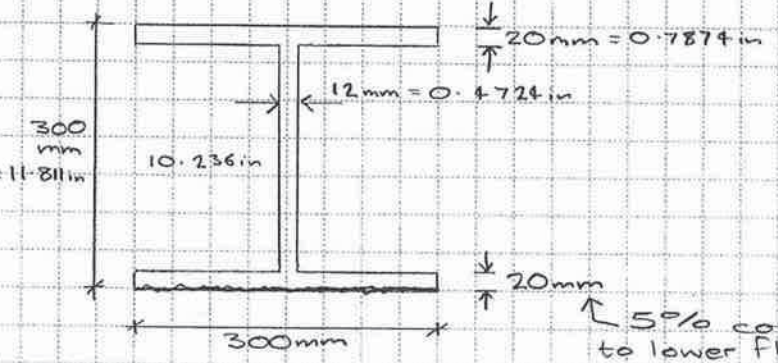

5% corrosion to lower flange ∴ reduce thickness to 19mm

Section Properties

BCSA Historical Structural Steelwork Handbook Table 8.6

I_{xx} = 25759 cm⁴ I_{yy} = 9007 cm⁴

r_x = 12.9 cm r_y = 7.6 cm

Z_{xx} = 1717 cm³ (104.78 in³) ✓ Z_y = 600 cm³ ✓

BE4 p4 concrete self weight = 150 lb/ft³

JACOBS		CALCULATION SHEET		
Office	Page No.	2	Cont'n Page No.	206
Job No. & Title	Originator	CB	Date	20/12/10
Section IMD 1433	Checker	GLR	Date	21/12/10

calculate modified elastic section modulus (Z_{xx}) due to corrosion to lower flange

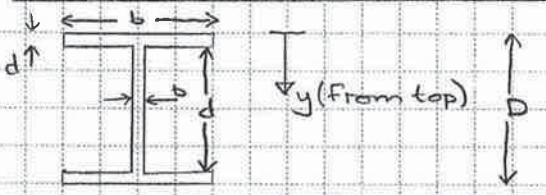

Element	(cm) b	(cm) d	(cm) y (from top)	(cm^2) A	(cm^3) Ay
top flange	30	2	1	60	60
bottom flange	30	1.9	28.95	57	1650.15
web	1.2	26	15	31.2	468

total area = 148.2 cm^2

depth to neutral axis (y_1) = $\frac{\Sigma Ay}{148.2} = \frac{2178.15}{148.2} = 14.697cm$

Element	$A(y-y_1)^2$	$I = bd^3/12$ (cm^4)
top flange	11256.47	20
bottom flange	11579.44	17.15
web	2.86	1757.6
Σ	22838.77	1794.75

$I_{xx} = \Sigma A(y-y_1)^2 + \Sigma I$
$= 24633.52$ ✓

$Z_{xc} = \frac{I_{xx}}{y_1} = \frac{24633.52}{14.697} = 1676.09cm^3$ ✓
$(102.28 in^3)$

$Z_{xt} = \frac{I_{xx}}{D-y_1} = \frac{24633.52}{30-14.697} = 1609.72cm^3$
$(98.23 in^3)$

Check:-

compact girder

Element	Dimension b (cm)	d (cm)	Area	y from top cm	Ay	A(y-y1)^2	I=bd^3/12
Top flange	30	2	60.00	1	60.00	11257.07	20.00
Top angles (hor)	0	0	0.00	0	0.00	0.00	0.00
Top angles (vert)	0	0	0.00	0	0.00	0.00	0.00
Web	1.2	26	31.20	15	468.00	2.86	1757.60
Bottom angles (vert)	0	0	0.00	0	0.00	0.00	0.00
Bottom angles (hor)	0	0	0.00	0	0.00	0.00	0.00
Bottom flange	30	1.9	57.00	28.95	1650.15	11578.84	17.15
						0.00	
Deduct rivets 1 (minus b)	0	0	0.00	0	0.00	0.00	0.00
Deduct rivets 2 (minus b)	0	0	0.00	0	0.00	0.00	0.00
						0.00	
NET AREA			148.20		2178.15		
GROSS AREA			148.20				
Depth to Neutral Axis y1		14.70					
					Sum	22838.77	1794.75
						Ixx=	24633.52
						Ztop	1676.05
						Zbot	1620.35

✓

Effective Length of Beam (ℓ_E)

BE4 Cl 303 (iv)

bearing directly onto granite

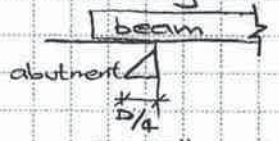

= 2.95"

centroid = 0.98"

ℓ_E = 15' + (2 × 0.98")
= 15' 1.96"
= 15.16 ft ✓

Permissible Stresses

BE4 Part I Cl 304(a) Permissive stresses from BS 153, Part 3B, Table 1, Case II

BS 153 Part 3B Table 1 A (solid web girders), Case II = + 25% increase to allowable stress from Cl 25-36

BS 153 Part 3B Table 3 Parts in bending 9.5 ton/in² (15.0 kg/mm²) = P_{bt}, P_{bc}

Parts in shear 5.5 ton/in² (8.7 kg/mm²) = P_q

BS 153 Part 3B Cl 29 Ave shear stress (P_q) < 6 $\left[1.3 - \dfrac{b/t}{250\left(1 + \frac{1}{2}\left(\frac{b}{a}\right)^2\right)}\right]$ ton/sq in

where a = 300 mm (11.811")
b = 260 mm (10.236")
t = 12 mm (0.4724")

P_q must be < 7.42 ton/in²
∴ Table 3 value applies P_q < 5.5 ton/in²

modified by Table 1
P_{bt} and P_{bc} ⇒ 9.5 × 1.25 = 11.875 ton/in² (18.75 kg/mm²)
P_q ⇒ 5.5 × 1.25 = 6.875 ton/in² (10.875 kg/mm²)

Section Capacity

M_c = Z_{xt} × P_{bt}
= 102.28 × 11.875 ✓
= 1214.58 ton.in = 101.24 ton.ft ✓

P_q = web area × P_q
= 0.4724 × 10.236 × 6.875
= 33.24 tons ✓

Jacobs BE4 site survey 07/10 top flange is restrained against buckling in internal beams effective length = 0 ∴ not considered

INTERNAL BEAMS

Dead Load Analysis on internal beams

beam self weight

81.22 lbs/ft = 0.03626 ton/ft ✓

bending (midspan) $= \frac{0.03626 \times 15.16^2}{8}$

$= 1.0417$ ton.ft ✓

shear (reactions) $= \frac{0.03626 \times 15.16}{2}$

$= 0.2749$ tons ✓

concrete jack arch and surfacing self weight

conservatively use concrete self weight and surfacing self weight as 150 lb/ft³

cross sectional area of jack arch/surfacing

total area $= (99.927 - 99.404) \times 0.915$

$= 0.4785\ m^2$

$= 5.1515\ ft^2$ ✓

jack arch segment

take 2/3 of square area as estimate

$= 0.07497\ m^2$

$= 0.8070\ ft^2$

Area $= 5.1515 - 0.8070 = 4.3445\ ft^2$

dead load $= 4.3445 \times 150$

$= 651.68$ lbs/ft

$= 0.2909$ tons/ft

bending (midspan) $= \frac{0.2909 \times 15.16^2}{8}$

$= 8.357$ ton.ft

shear (reactions) $= \frac{0.2909 \times 15.16}{2}$

$= 2.205$ tons

JACOBS			CALCULATION SHEET		
Office		Page No.	5	Cont'n Page No.	206
Job No. & Title		Originator	CB	Date	20/12/10
Section	IMD 1433	Checker	JZR	Date	21/12/10

TOTAL DEAD LOAD EFFECTS

bending = 9.3987 ton.ft
shear = 2.4799 tons

Live Load effects on internal beams

BE4 Part II Section 3 Graph 5

inputs l_E = 15.16 ft
Gross vehicle weight = 24T

bending (midspan) = 52 ton.ft

BE4 Part II Section 3 Graph 1

Proportion factor (K)

input l_E = 15.16 ft
girder spacing = 3ft

K = 0.28

TOTAL LIVE LOAD EFFECT

bending (midspan) = 52 x 0.28
= 14.56 ton.ft

Check beams pass in bending

P3

capacity = 101.24 ton.ft
applied = 9.3987 + 14.56 = 23.96 ton.ft

∴ remaining capacity = 77.28 ton.ft

BE4 PII Section 3 301 (b)

Check beams pass in shear

P3

capacity = 33.24 tons
dead load = 2.4799 tons
∴ live load capacity = 33.24 - 2.3996
= 30.84 tons

BE4 PI 305 (a) and Tab 1

30.84 tons > 10 ∴ 24t vehicle capacity

Internal beams 24t vehicle capacity

JACOBS		CALCULATION SHEET		
Office	Page No.	6	Cont'n Page No.	206
Job No. & Title	Originator	CB	Date	20/12/10
Section IMD/433	Checker	JLR	Date	21/12/10

EDGE BEAMS

IMD-433 BE4 Form AA

"Edge girders are separated from carriageway by an intervening girder and therefore not required to be assessed for live loads"

$$l_E = \frac{15.16}{2} \text{ ft} = 7.58 \text{ ft} = 90.96 \text{ in}$$

BS 153 Part 3B Cl 28 b(i) B

Check compression flange

$$C_s = \frac{170000}{(l_E/r_y)^2}\sqrt{\left(1+\frac{1}{20}\left(\frac{l_E T}{r_y D}\right)^2\right)} + K_2\frac{170000}{(l_E/r_y)^2}$$

$$r_y = \sqrt{\frac{I_{yy}}{A}}$$ (calculate to consider corrosion)

$$I_{yy} = \frac{2\times30^3}{12} + \frac{1.9\times30^3}{12} + \frac{26\times1.2^3}{12}$$

$$= 8778.74 \text{ cm}^4$$ ✓

$$A = (2\times30) + (1.9\times30) + (26\times1.2)$$

$$= 148.2 \text{ cm}^2$$ ✓

$$\Rightarrow r_y = \sqrt{\frac{8778.74}{148.2}}$$

$$= 7.696 \text{ cm}$$ ✓

$$= 3.030 \text{ in}$$

BS 153 Part 3B Table 5

$T = K_1 \times 0.7874 \text{ in}$ where $N = 1 \Rightarrow K_1 = 1$

$= 0.7874 \text{ in}$ ✓

$D = 11.811 \text{ in}$ ✓

BS 153 Part 3B Table 6

$K_2 = 0.013$ based on $M = 0.513$

from $I_{\text{top flange}} = \frac{2\times30^3}{12}$

$= 4500 \text{ cm}^4$

$I_{\text{bottom flange}} = \frac{1.9\times30^3}{12}$

$= 4275 \text{ cm}^4$

$$C_s = \frac{170000}{(90.96/3.03)^2}\sqrt{\left(1+\frac{1}{20}\left(\frac{90.96\times0.7874}{3.03\times11.811}\right)^2\right)} + 0.013\left(\frac{170000}{(90.96/3.03)^2}\right)$$

$$= 209.12 \text{ ton/in}^2$$

BS 153 Part 3B Table 8

$p_{bc} = 10 \text{ ton/in}^2$ ∴ use 10 ton/in^2 not that from P3

section capacity (compression flange) =

$Z_{xc} \times p_{bc} = 102.28 \times 10$

$= 1022.8 \text{ ton.in}$

$= 85.23 \text{ ton.ft}$

Dead load effects

P4 beam self weight ⇒ 1·0417 ton.ft
concrete + macadam self weight = $\frac{8 \cdot 0525}{2}$
= 4·0263 ton.ft

parapet self weight, allow 25 lbs/ft
bending (midspan) = $\frac{25 \times 15 \cdot 16^2}{8}$
= 718·21 lbs.ft
= 0·321 ton.ft

TOTAL DEAD LOAD EFFECT
= 1·0417 + 4·0263 + 0·321
= 5·389 ton.ft < 85·23 ton.ft

∴ PASS

Edge beams with required BE4 capacity

tension due to bending in lower flange and shear in web are less onerous in edge beams than internal beams due to lower dead load effects and no live load effects
∴ no calculations required.

JACK ARCH ASSESSMENT

IMD-433 Form AA Empirical assessment using Bridgeguard 3
Current Information Sheet No. 22

see appended Bridgeguard Proforma for Empirical Assessment of Brick, Masonry and Concrete Jack Arches.

Non-compliant / Failing elements
* Possible failure due to tie bar location at crown of jack arches

PRO FORMA FOR EMPIRICAL ASSESSMENT OF BRICK, MASONRY AND CONCRETE JACK ARCHES AND ASSOCIATED TIES

(To be included with the Assessment Report Calculations)

BRIDGE NAME:	IMD-433 Mill Tack Road Bridge
RAILTRACK NO:	

Jack Arch Assessment

Assessment should include completion of all three Sections even where Section 1 has shown the bridge deck to be non-compliant.

SECTION 1 CHECKS FOR COMPLIANCE WITH 40 T CONFIGURATION REQUIREMENTS

				Compliant Yes/No
What is maximum clear span of the arch			m	Yes
	Non-compliant if greater than 2.0m			
Do jack arches spring from bottom flanges of beams?		Yes		Yes
	If not, non compliant			
What is the beam spacing?	b	= 0.915	m	Yes
What is the rise of the arch?	r_c	= 0.147	m	
Gross aspect ratio	b/r_c	= 6.22		
	Non -compliant if greater than 10			
What is the arch barrel thickness (including concrete fill above) and how is it derived ie from record drawings or site investigation?	d	=	mm	N/A
	Non-compliant if thickness less than 220			

JLR.
21/12/10.

PRO FORMA FOR EMPIRICAL ASSESSMENT OF BRICK, MASONRY AND CONCRETE JACK ARCHES AND ASSOCIATED TIES

(To be included with the Assessment Report Calculations)

BRIDGE NAME:	IMD-433 Hill Tack Road Bridge
RAILTRACK NO:	

SECTION 2 CHECKS FOR DEFICIENCY

Type No	Deficiency				Pass/ Fail
1	What is the backing material? Is it structural? concrete?				
	Does the structural backing extend to at least the crown level of the arch extrados? *If not, then fail[(1) (4)].*				Pass
	What is effective shear depth of deck? (= arch rise + barrel thickness + height of structural fill above crown of extrados) minimum = 310mm	D_s	366 =	mm	Pass
	Is D_s ≥ minimum requirements of Fig 1. Fail if < Fig 1				
2	Do jack arches span longitudinally (eg in half through girder construction) or transversely between longitudinal girders? transversely				
	For longitudinal spanning jack arches, ignore following questions on ties/lateral restraint and state N/A.				
	Are ties provided in edge bays of transversely spanning jack arches? Yes. *If yes, go to 3a/3b* *If not, fail unless edge bay is 'hard' (see 5)*				Pass
3a	What is the cross sectional area of one tie? (allowing for corrosion losses)	A	=	mm^2	
CI	What is number of ties per beam length?	n	=	No	
	What is the clear skew span?	L	=	m	
	Specific area of tie (A_s) = $\frac{(n+1) \times A}{L}$	A_s	=	mm^2/m	
	Non-compliant if less than 260mm²/m				
	What is maximum tie spacing?	S	=	m	
	Non-compliant if greater than 2.5m for cast iron				
3b	What is the cross sectional area of one tie? (allowing for corrosion losses)	A	= 506.71 assume 1in bar = 25.4mm ϕ	mm^2	
WI/	What is number of ties per beam length?	n	= 2	No	
ST	What is the clear skew span?	L	= 4.621	m	
	Specific area of tie (A_s) = $\frac{(n+1) \times A}{L}$	A_s	= 328.96	mm^2/m	Pass
	Non-compliant if less than 260mm²/m				
	What is maximum tie spacing?	S	= 1.524	m	Pass
	Non-compliant if greater than 3.0m for wrought iron/steel				
4	Are ties located within crown of external arch? Yes *If so, then fail CI or possible fail for WI/ Steel*				Poss Fail
5	Does external bay construction provide alternative lateral restraint? (ie not soft edge)? *If so, pass.* *If not, are ties provided in first Jack Arch bay? If yes, treat as 3a (or 3b). Otherwise fail.*				

Notes: *(1) Results also in loss of D/d (composite action) for cast iron beams*
(4) A trial hole should be undertaken to confirm the existence of structural backing if there is any doubt.

GLR 21/12/10

PRO FORMA FOR EMPIRICAL ASSESSMENT OF BRICK, MASONRY AND CONCRETE JACK ARCHES AND ASSOCIATED TIES

(To be included with the Assessment Report Calculations)

BRIDGE NAME:	IHD-433 Mill Tack Road Bridge
RAILTRACK NO:	

SECTION 3 CHECKS FOR DEFECTS

Type No	Defect	Empirical Assessment		Pass /Fail
		CI Decks	WI/Steel Decks	
6	Rotation of supporting beam	Fail	Fail	Pass
7	Horizontal displacement of supporting beam	Fail displacement parapet stone	Fail of adjacent appears unrelated	Pass
8	Inadequate support to springings eg corrosion of bottom flange of supporting beam over a significant length, missing bedding mortar	Possible Fail	Possible Fail corrosion to lower flange is not to significant depth i.e. 5% maximum	Pass
9	Transversely bowed bottom flange of supporting beam	Fail	Fail none reported	Pass
10	Cracking at crown of arch owing to spreading of springings (other than 12, 13)	Fail	Fail none reported	Pass
11	Distortion and any associated cracking of jack arch barrel	Fail	Fail none reported	Pass
12	Arch crack resulting in substructure crack	Fail	Fail (5)	Pass
13	Substructure crack or other distress resulting in crack to jack arch	Possible Fail (3)	Possible Fail (3) (5)	Pass

Note: (3) 'Substructure renovation' or 'Monitoring' as appropriate; 'Repair of arch' (if appropriate).
(5) Not applicable in general to longitudinally spanning arches.

JZR 21/12/10.

PRO FORMA FOR EMPIRICAL ASSESSMENT OF BRICK, MASONRY AND CONCRETE JACK ARCHES AND ASSOCIATED TIES

(To be included with the Assessment Report Calculations)

BRIDGE NAME:	IMD-433 Mill Tack Road Bridge
RAILTRACK NO:	

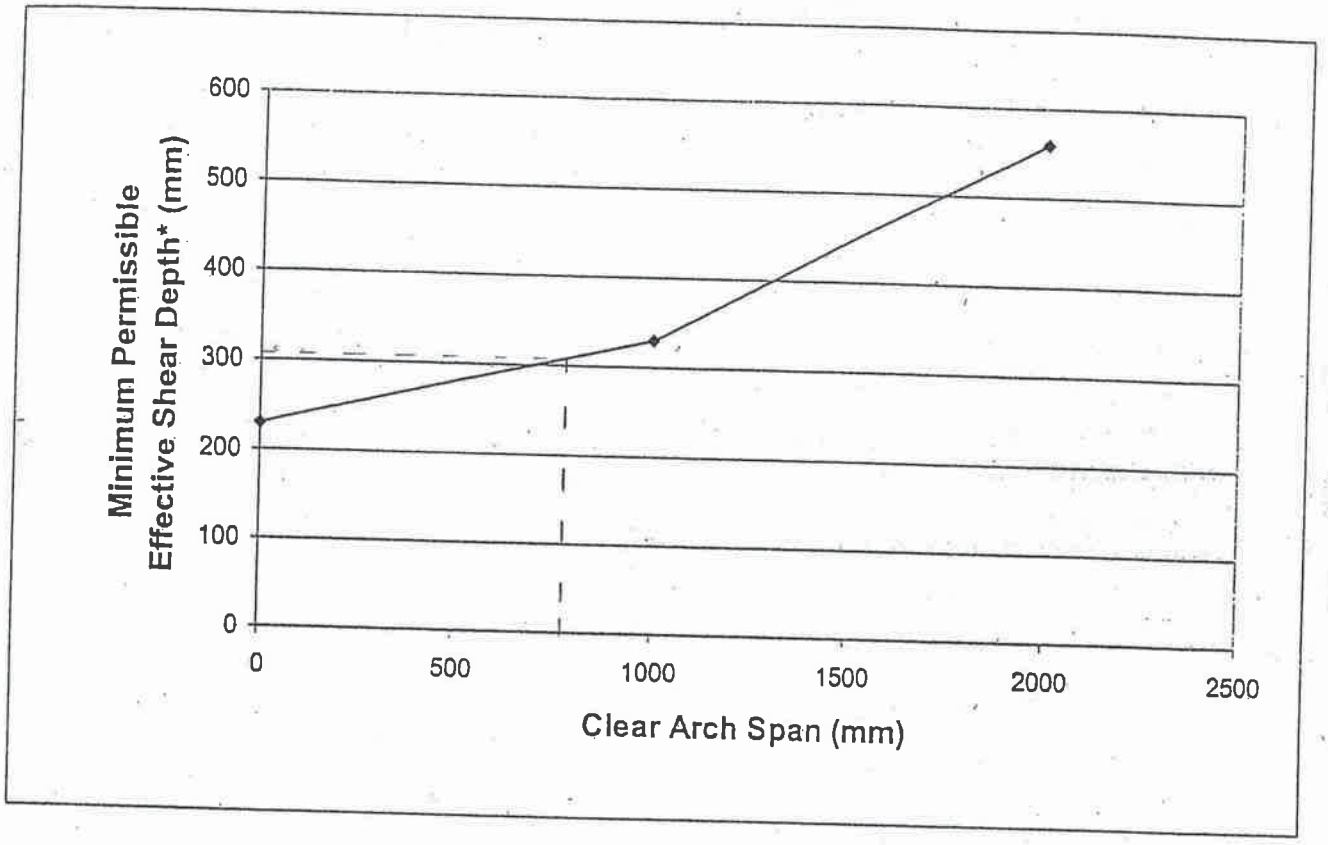

(= arch rise + barrel thickness + height of structural fill above crown of extrados)

Figure 1

JLR 21/12/10

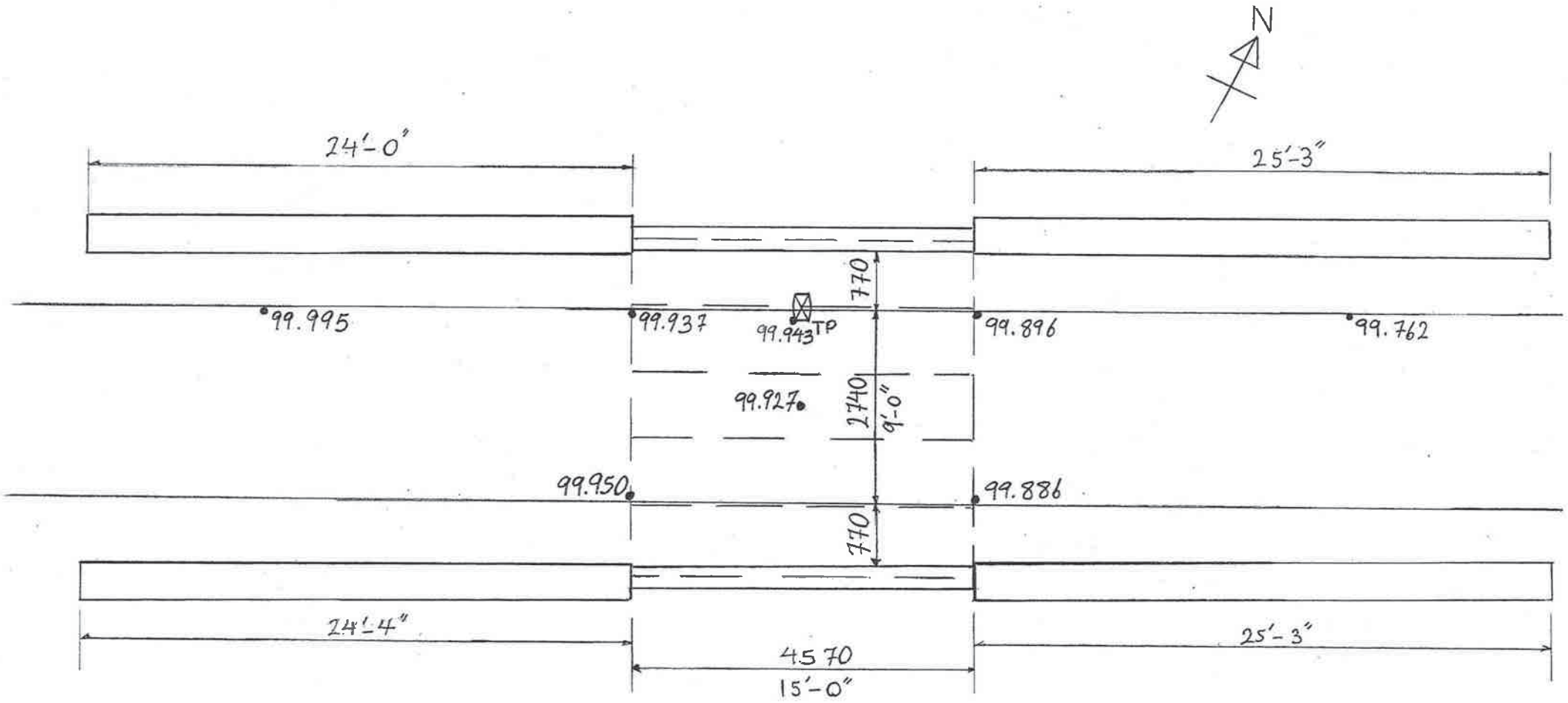
N
24'-0"
25'-3"
770
99.995
99.937
99.943 TP
99.896
99.762
99.927
2740
9'-0"
99.950
99.886
770
24'-4"
25'-3"
4570
15'-0"

IMD/433

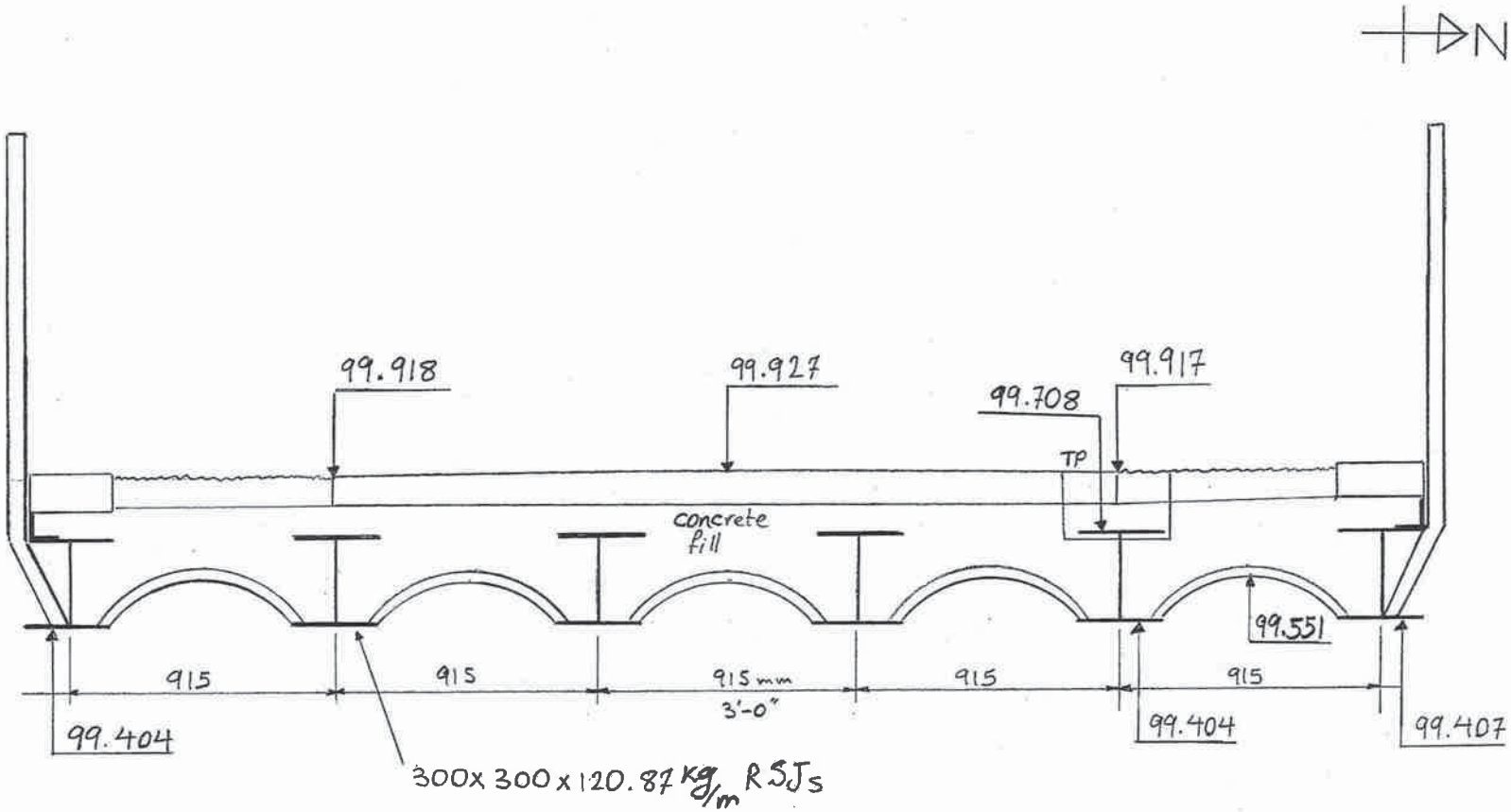

Section at mid-span

IMD/433