North Ayrshire Council Roads Services
C20/40 Montgreenan Station Bridge

RPL Structure Ref. DAK/81

Assessment Report

Prepared by Babtie Group

BUA0008200/B/Doc C20/40

Version 1

November 2003

Copy 1

[redacted]

Structure: C20/40 Montgreenan Station Bridge Date: 14/11/03

NORTH AYRSHIRE COUNCIL
ROADS SERVICES

FORM 'BA' (BRIDGES)
ASSESSMENT/CHECK CERTIFICATE

1. STRUCTURE IDENTIFIER

1.1 Structure Reference No. Rail Property Ltd. **DAK/81**

North Ayrshire Council: **C 20/40**

1.2 Structure Name: **Montgreenan Station Bridge**

2. ASSESSMENT/CHECKING OF ASSESSMENT

We certify that reasonable professional skill and care has been used in the (assessment/ checking of assessment) of the above structure with a view to securing that:-

2.1 it complies with:-

\+ (a) the Approval in Principle dated **06 April 2003** * including the following:-

(List, if any, the departures from the standards, and additional methods or criteria used in the assessment with references and justification for their acceptability).

None

2.2 the unique numbers of the drawings used for the assessment are:-

NAC Drg Ref. C 20/10/1 – Ayrshire - Dalry to Kilmarnock Line Bridge No 81 carrying Montgreenan Road over Railway at Montgreenan Station

Signed [redacted] .....
Team [redacted]

Name [redacted] /11/03.....

Signed [redacted] .....
Direct [redacted]

Name [redacted] /11/03.....

3. APPROVAL BY NORTH AYRSHIRE COUNCIL, ROADS SERVICES

The above is approved by North Ayrshire Council

Signed . [redacted] .....
Floodin [redacted] **r (including**
Structu [redacted]

Name... [redacted] .....

Structure: C20/40 Montgreenan Station Bridge Date: 14/11/03

4. ACCEPTANCE BY THE CIVIL ENGINEER

This certificate is accepted by Rail Property Ltd.

Signed..[redacted]

Title CIVIL ENGINEER Date 18/10/10

* Insert date of acceptance of the AIP by TAA, including the dates of any addenda.

\+ Delete if not required.

Note: If any completed Certificate consists of 2 pages or more, each additional page must be headed with the name of the structure and the date.

Executive Summary

An inspection and load assessment of C20/40 Montgreenan Station Bridge (RPL Ref DAK/81) has been carried out.

The inspection indicates that the structure is generally in good condition. Defects requiring remedial measures were noted and recommendations are included in the report.

The assessment indicates that the arch barrel is adequate for 18 tonne reduced assessment live loading and can carry 13 units of HB loading. The substructure, under a qualitative assessment, is deemed to be adequate for the above loads.

There appears to be scope for increasing the assessed capacity to 40/44 tonnes by undertaking a relatively minor adjustment to the vertical alignment of the road in the vicinity of the bridge.

Contents

1. Introduction

1.1 A load assessment of C20/40 Montgreenan Station Bridge has been carried out on behalf of North Ayrshire Council under the NAC Bridge Assessment Programme.

1.2 The instructions were given in a meeting between [redacted] Babtie Group, held on 11 June 2003. NAC's requirements for the assessment were for the following tasks to be carried out:

i. Inspection for Assessment and condition report

ii. Load assessment to DMRB, with arch assessment to be carried out using both the modified MEXE method and the mechanism method. Assessment required for 40/44 tonne Assessment Live Loading and HB loading

iii. Assessment of parapets to the County Surveyors' Society Guidance Note and Priority Ranking to DMRB

iv. Comment on visibility, any seriously substandard aspects of the highway geometry, presence of safety fencing and scour risk

v. A search of public utility plant was to be carried out.

2. Description of Structure

2.1 The structure is a single span, masonry arch skewed at approximately 20° with a square span of 8.5m. The abutments, wingwalls and parapets are also of masonry construction.

2.2 The bridge carries a C Class road over a dismantled railway track. It is shown in the photographs contained in Appendix A to this report and its location plan is included in Appendix B.

3. Inspection for Assessment

3.1 Introduction

3.1.1 The inspection was carried out on 2 July 2003 in mild, dry weather by the following personnel:

[redacted] Hons), MSc, CEng, MICE, MIHT

3.1.2 Access to the structure was gained using ladders. Key dimensions were measured and carriageway levels were taken at the time of the inspection.

3.1.3 The condition report is included in Appendix B. The geometric details, which were recorded for the assessment, are included in Appendix C.

3.2 Foundations

3.2.1 The foundations are not visible for inspection, however there is no evidence of movement or distress in the structure which could be attributed to deficiencies with the foundations.

3.3 Abutments

3.3.1 The abutments are of coursed, dressed sandstone construction and are in good condition.

3.4 Spandrels and Wingwalls

3.4.1 The spandrels and wingwalls are of coursed, dressed sandstone construction. They are generally in good condition although there is vegetation growth and local spalling on the wingwalls and very slight local mortar loss from joints in the spandrels.

3.5 Arch Barrel

3.5.1 The arch is of three-centred geometry and is of ashlar sandstone masonry construction. It is in good condition.

3.6 Surfacing

3.6.1 The surfacing is dense bitumen macadam and is in good condition.

3.7 Parapets

3.7.1 The parapets are generally of sandstone ashlar construction, although areas have been reconstructed in blockwork and brickwork, Photograph 3.

3.7.2 Numerous masonry stones are missing or loose and there are areas of vegetation growth, Photographs 4 to 6.

4. Structural Investigations for Assessment

4.1 A preliminary assessment based on the available information indicated that the abutment thickness, which is not indicated on the drawing, is critical to the assessed capacity of the structure. This is due to the 3-centred construction of the arch barrel, which requires a geometry which will allow a reasonably smooth thrust line through the haunching, which the drawing indicates is present, into the abutments. Intrusive investigations were therefore undertaken to determine the abutment thickness.

4.2 Cores were cut into the southwest abutment by Henderson Thomas Associates on 22 July 2003, under our supervision. An initial core was cut at approximately the mid-width of the abutment, which indicated a wall thickness of 1380mm, before a clay/rubble material was encountered.

4.3 A further core was cut at the right hand $^{1}/_{3}$ point of the abutment to attempt to determine whether counterfort walls were present, which would have the effect of buttressing the abutment wall. This location was selected since if counterfort walls had been constructed, it

is likely that these would have been at the mid-length and ¼ points, or at the $^1/_3$ points. This core indicated a wall thickness in excess of 2200mm, since at this depth the coring drill was still cutting into solid masonry.

4.4 It is likely therefore that substantial counterforting is present which will act, together with the wingwalls, to provide additional support the abutments. An average abutment thickness of 1916mm has been calculated, based on estimated counterfort and wingwall thicknesses and this has been used in the assessment.

5. Assessment

5.1 Superstructure

5.1.1 The parameters used for the arch assessment are included in Appendix C to this report.

5.1.2 The effective width of arch barrel has been calculated in accordance with BD 21/01. However to allow for the reduction in available barrel width when loading is applied near the edge of the structure, such as in accidental loading, the worst case of distribution on one side of the vehicle only has also been considered when appropriate.

5.1.3 The assessment for HA loading was carried out by both the Modified MEXE method and by the mechanism method using the software 'Archie-M'. MEXE indicated that the arch is satisfactory for 40/44 tonne Assessment Live Loading, with allowable axle loads of 15.4, 13.3 and 27.2 tonnes being obtained for triple, double and single axle bogies respectively. The mechanism method also gave a capacity of 40/44 tonnes for the arch barrel.

5.1.4 The depth of fill above the arch barrel at this bridge exceeds the barrel thickness and BD 21/01 states that under these circumstances, MEXE can give unconservative results. In addition, BA 16/97 gives guidance that MEXE should not be used if the arch is flat or appreciably deformed. A second, lower bound, MEXE analysis was therefore carried out, with the depth of fill above the barrel set to the barrel thickness. This gave capacities of 8.8, 7.6 and 15.5 tonnes for triple, double and single axle bogies respectively. These values give a reduced assessment loading of 18 tonnes.

5.1.5 The HB assessment was carried out by factoring the lower bound MEXE double axle capacity and this gave a capacity of 13 Units.

5.2 Substructure

5.2.1 The substructure has been assessed qualitatively as being adequate for the above loadings.

5.3 Parapets

5.3.1 The parapets have been assessed in accordance with the County Surveyors Guidance Notes as being inadequate for impact speeds of 30mph and have been assigned a Priority Ranking of 15.

5.4 Highway Geometry

5.4.1 Visibility along the highway over the bridge is poor due to the structure being located at the crest of a hill. There are grassed verges over the structure of 0.60m and 0.65m width. There is no approach or departure safety fencing, however traffic volume and speeds are low and we do not consider provision of safety fencing to be high priority at this site.

5.5 Scour Risk

5.5.1 The bridge crosses a dismantled railway and there is therefore no scour risk.

5.6 Public Utilities

5.6.1 A public utilities search has been carried out in conjunction with the assessment and the following public utility provider has indicated it has plant as follows:

Scottish Water – 63mm MDPE

6. Conclusions and Recommendations

6.1 Inspection

6.1.1 The structure is generally in good condition, however it is considered that the following aspects require to be addressed:-

i. The parapets are suffering from missing and loose masonry and mortar loss from joints to an extent that their integrity must be impaired. It is recommended that the areas of missing/loose masonry are re-built and joints are repointed. This work has been assigned a Severity Ranking of 4 on the Principal Structure Inspection Form.

6.2 Assessment

6.2.1 The assessed capacity using the lower-bound MEXE approach is 18 tonnes, whilst the mechanism method gave a capacity of 40/44 tonnes. The mechanism method appears to give unreliable results for 3-centred arches such as this, with major differences in results being obtained for nominally similar arch/abutment geometries. In this instance we consider that the lower bound MEXE results should be adopted and the assessed capacity is therefore 18 tonne Reduced Assessment Live Loading and 13 units of HB loading.

6.2.2 The critical loading configuration in the lower bound MEXE method is the double axle bogie with axle lift-off being assumed to occur. The effect of axle lift-off is to decrease the calculated Modified Axle Load from 10 tonnes to 7.6 tonnes. If axle lift-off were prevented then the structure would be adequate for 40/44 tonne loading. The lower bound MEXE analysis has been carried out using a depth of fill and carriageway construction of 380mm, which is approximately 240mm less than the actual depth. Thus there would appear to be

scope for re-profiling the vertical alignment in the vicinity of the bridge to prevent axle lift-off occurring, which would increase the calculated capacity to 40/44 tonnes.

6.2.3 Alternative options would include:

- Use of a proprietary system such as cintec anchors
- Provision of an additional supporting structure beneath the arch
- Provision of a relieving slab over the arch
- Infilling the structure.

APPENDIX A

Photographs

D/S

C20 BENSLIE @ C20 NO CULVERT?

THE BRIDGE THAT'S NOT THERE!

u/s

Photograph 1- Northwest Elevation

Photograph 2- View on Carriageway Looking Northeast

Photograph 3 – Reconstructed Parapet

Photograph 4 – Loose/Missing Masonry in Parapet

Photograph 5 – Loose Masonry in Parapet

Photograph 6 – Vegetation Growth and Loose/Missing Masonry in Parapet

APPENDIX B

Inspection Report Form

Drawing

Location Plan

North Ayrshire Council – Roads
Principal Structure Inspection Form

Agent Authority **NORTH AYRSHIRE COUNCIL**
Road No.: C20 Bridge No.:40
Type of Bridge: Masonry Arch
Minimum Headroom/s: N/A
Condition Report

O.S. Map Reference: 234090 643405
Bridge Name: Montgreenan Station Bridge
Spans: 1
Inspected By: [redacted]
Date of Inspection: 02/07/03

Item No.	Item Description	Extent	Severity	Comment
1	Invert	A	1	Fenced across and part infilled.
2	Aprons	-	-	
3	Foundations	A	1	No evidence of problems
4	Cutwaters	-	-	
5	Piers/Columns	-	-	
6	Abutments	A	1	
7	Wing Walls	B	2	Some vegetation growth and local spalling
8	Embankments	A	1	
9	Training Walls	-	-	
10	Drainage Substructure	-	-	
11	Parapets	C	4	Numerous stones missing & loose with local deformations. Vegetation growth
12	Bearings	-	-	
13	Expansion Joints	-	-	
14	Main Beams	-	-	
15	Encased Ends	-	-	
16	Troughing	-	-	
17	Jack Arches	-	-	
18	Transverse Beams and Diaphragms	-	-	
19	Waterproofing	B	2	Slight seepage through arch barrel in places
20	Drainage Superstructure	-	-	
21	Concrete Deck	-	-	
22	Arch Springing	A	1	Minor weathering
23	Arch Ring	A	1	
24	Voussoirs/Archface	A	1	Minor weathering
25	Spandrel Walls	A	1	Generally good. Some local mortar loss.
26	Tie Rods	-	-	
27	Pointing	A	1	Generally good except as noted
28	Condition of Masonry	A	1	Generally good except as noted
29	Surfacing	A	1	

Was Remedial Work recommended at previous Inspection satisfactorily completed? Yes / No.
Comments if answer is no.

Condition Classification from BA 63/94

	Extent		Severity
A	No significant defect	1	No significant defect
B	Slight, not more than 5% of length or area affected	2	Minor defects of a non-urgent nature
C	Moderate, 5 - 20% affected	3	Defects which should be included for attention within the next annual maintenance programme
D	Extensive, more than 20% affected	4	Severe defects where urgent action is needed

L.M.S. - SCOTTISH DIVISION
ROAD & RAIL TRAFFIC ACT 1933
AYRSHIRE:- DALRY (DALRY Jn) TO KILMARNOCK LINE AT 27 MLS. 38 CHS.
BRIDGE Nº 81 CARRYING MONTGREENAN ROAD (UNCL.) OVER RAILWAY AT MONTGREENAN STATION.
CONSTRUCTED IN 1843

INDEX Nº 906

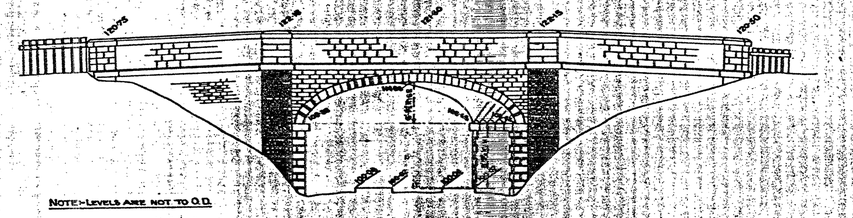

SCALE 1/8 IN TO 1 FT.

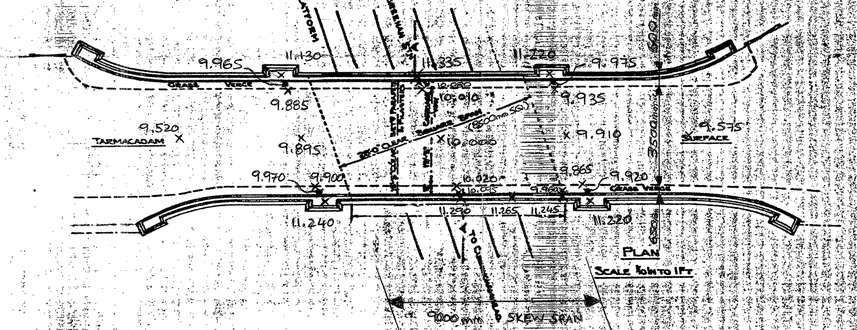

SCALE 1/8 IN TO 1 FT.

SQUARE SECTION OF ARCH
SCALE 1/8 IN TO 1 FT.

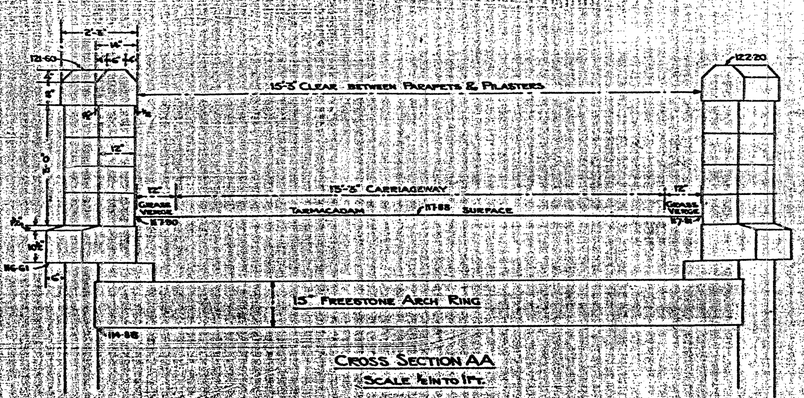

CROSS SECTION AA
SCALE 1/8 IN TO 1 FT.

DESCRIPTION	SPAN		RISE		DEAD LOAD TONS PER FOOT	HEAVIEST VEHICLE (TONS)		HEAVIEST AXLE (TONS)	
	CLEAR FT.	EFFECTIVE FT.	ACTUAL FT.	VIRTUAL FT.		LEGAL SPEED	SLOW SPEED	LEGAL SPEED	SLOW SPEED
15" FREESTONE ARCH RING									

REF:- S.W. DISTRICT PLAN Nº 7E.

161/81

C20/40/1

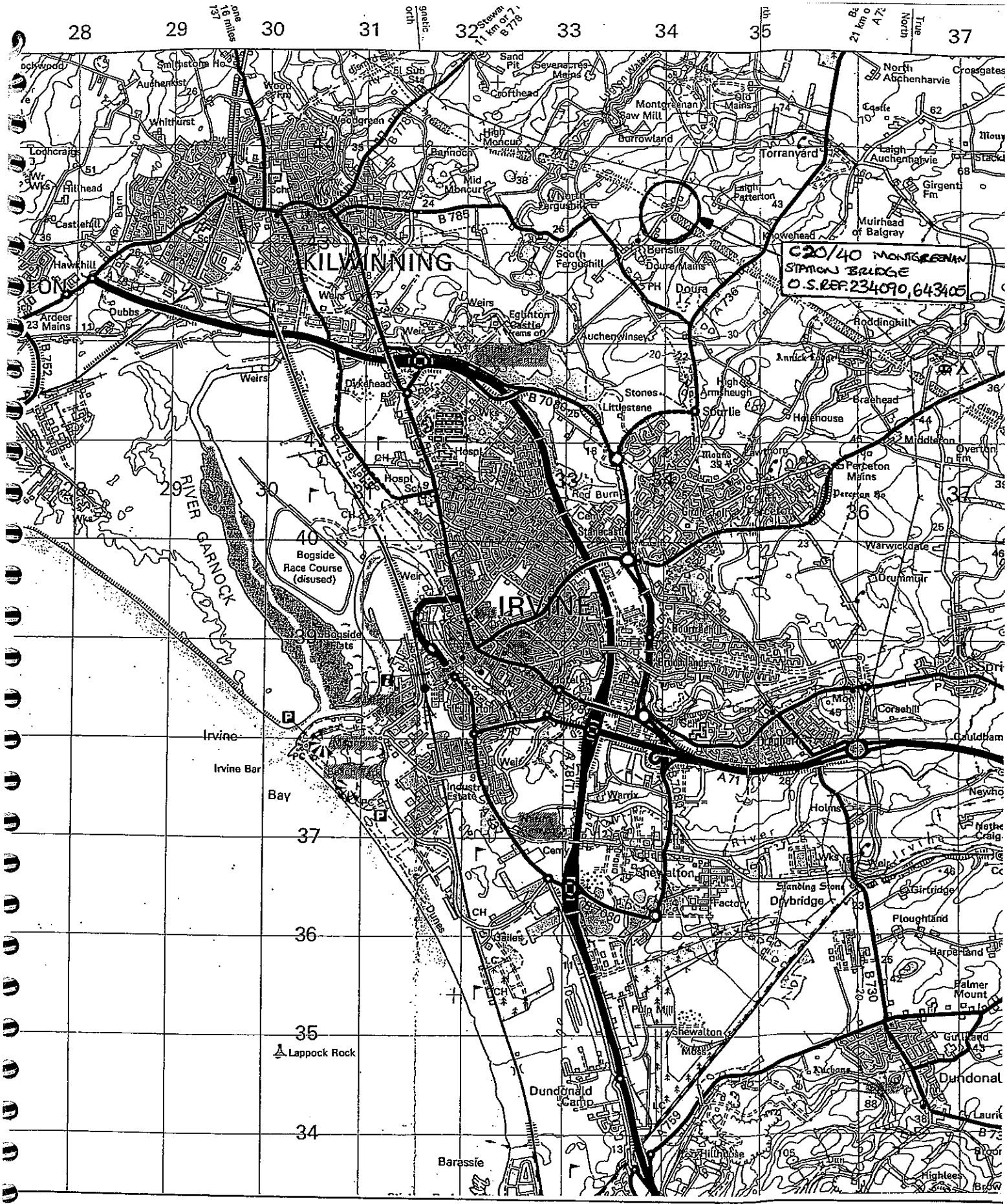

C20/40 MONTGREENAN STATION BRIDGE

Location Plan

APPENDIX C

Assessment and Check Calculations

INDEX TO ASSESSMENT CALCULATIONS
C20/40 Montgreenan Station Bridge

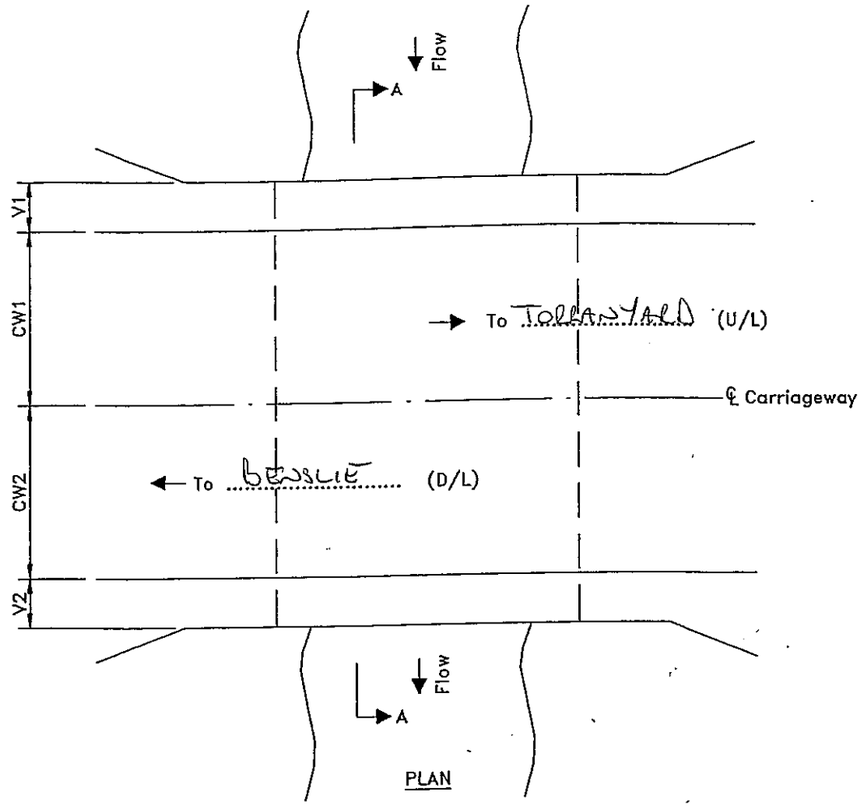

PLAN

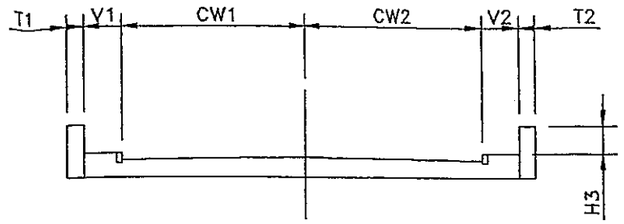

SECTION A–A

MEASUREMENTS	D/S	U/S
D	28600 mm	28600 mm
d	380 mm	380 mm
H2	620 mm	620 mm
H3	1255 mm	1195 mm
T1	300 mm	
T2	300 mm	
V1	600 mm	
V2	650 mm	
CW1	1750 mm	
CW2	1750 mm	
Safety Fencing u/l	—	—
Safety Fencing d/l	—	—
Visibility u/l	POOL – BEND & CREST OF HILL	
Visibility d/l	FAIR – CREST OF HILL	
Scour risk	NIL	
Lsquare	8500 mm	
Lskew	9000 mm	
Rc	1865 mm	1865 mm
Rq	1590 mm	1590 mm
Road Speed	60 mph	

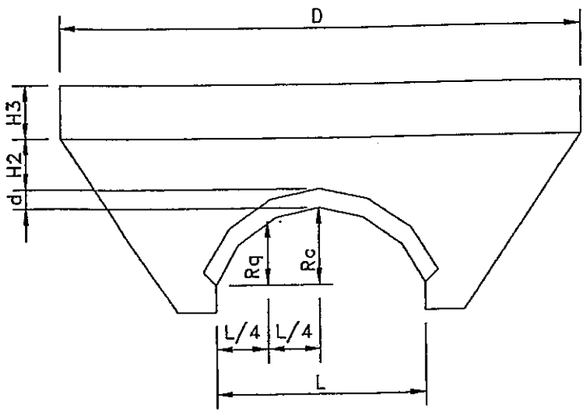

DOWNSTREAM ELEVATION

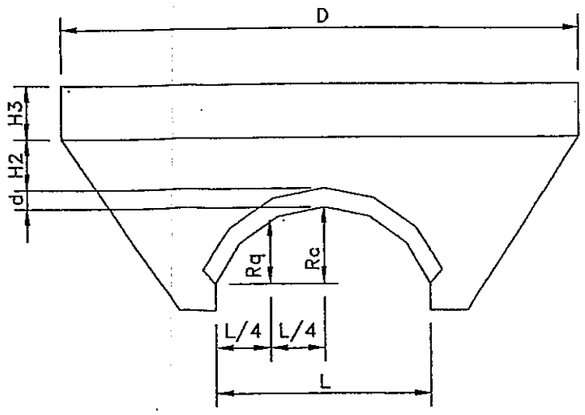

UPSTREAM ELEVATION

COMMENTS	
Arch Barrel	GOOD
Fill	—
Type of Construction of Barrel	ASHLAR SANDSTONE
Condition of Material in Barrel	GOOD
Deformation of Arch Barrel	NONE EVIDENT
Position/Amount of Dropped Vousoirs (show on sketch)	NIL
Cracks (width/length/number)	A FEW HISTORIC LOCAL CRACKS – NOT SIGNIFICANT
Width of Mortar Joints	5 mm
Depth of Mortar Joints	40 mm (INCL. GROOVES)
Condition of Mortar Joints	GOOD

Client	North Ayrshire Council
Project	North Ayrshire Council Bridge Assessment Programme
Title	C20/40 MONTGREENAN STATION
Drawing No.	
Scale	NTS
Date	
Drawn	
Checked	
Approved	

BABTIE			CALCULATION SHEET	
OFFICE EDINBURGH	PAGE No.	1	CONT'N PAGE No.	
JOB No. & TITLE NAC WP3 - PARAPET RANKING	ORIGINATOR	[redacted]	DATE	28/7/03
SECTION C20/40 MONTGREENAN STATION	CHECKER		DATE	

BA 37/92

RISK RANKING (ANNEX A)

GROUP 1 RANK 1
2 RANK 1
3 RANK 3
4 RANK 0

∴ RISK RANKING = 5

CONTAINMENT RANKING 3

∴ OVERALL PRIORITY RANKING = 3×5 = 15

ASSESSMENT TO CSS GUIDANCE NOTES

TRAFFIC SPEED = 60mph (SPEED LIMIT)
CONDITION OF PARAPET :- POOR,
FIG 10.4 :- PARAPET THICKNESS = 300mm
PARAPET HEIGHT = 1195mm (MIN)

DUE TO POOR CONDITION EFFECTIVE THICKNESS WILL BE TAKEN AS 250mm.

THEN ASSESSED IMPACT CAPACITY < 30mph.

BRIDGE: C20/40 MONTGREENAN STATION

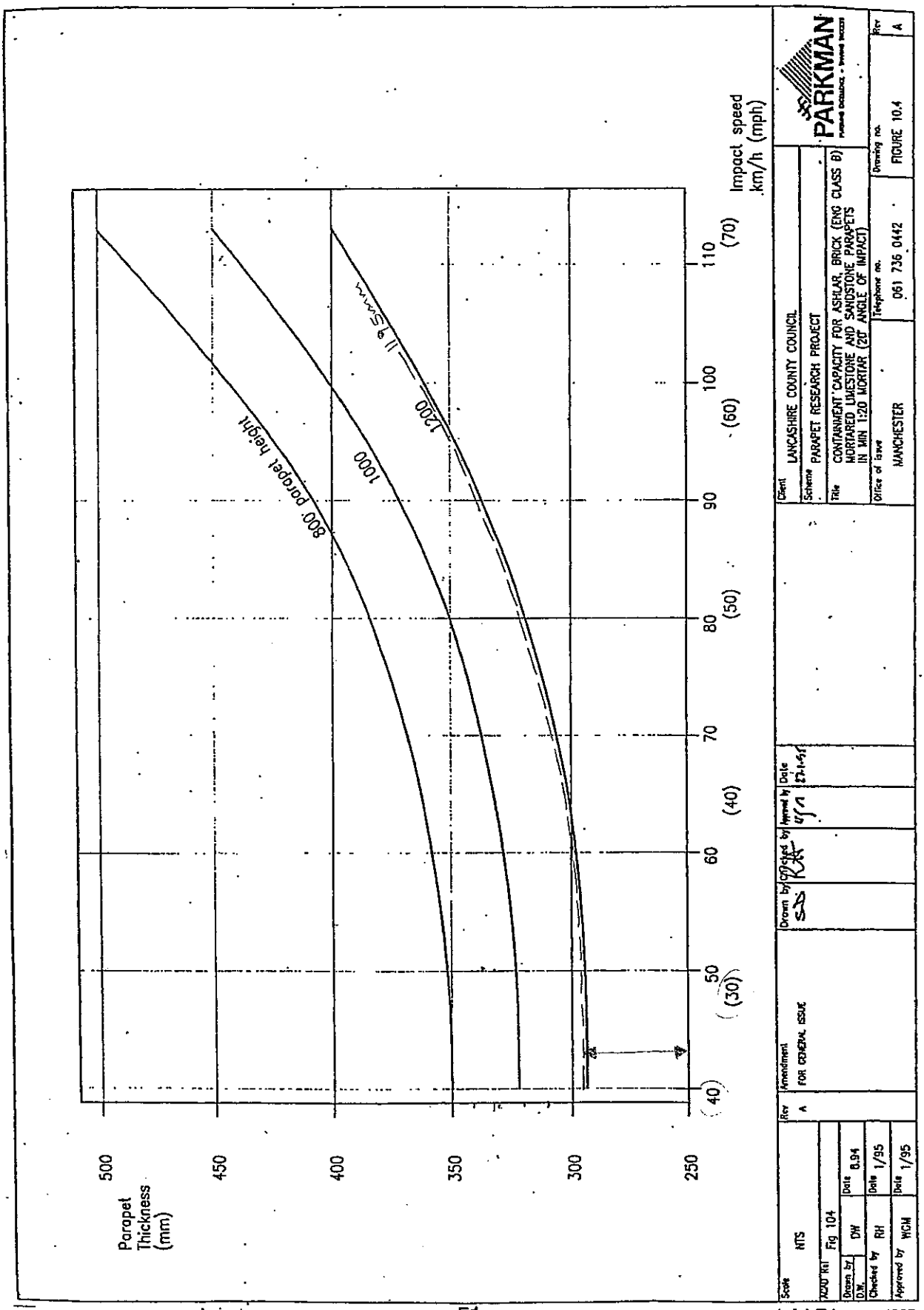

BABTIE			CALCULATION SHEET
OFFICE EDINBURGH	PAGE No. 3	CONT'N PAGE No.	
JOB No. & TITLE N.A.C. – WP3 : MEXE ASSESSMENTS	ORIGINATOR [redacted]	DATE	28/07/03
SECTION C20/40 MONTGREENAN STATION	CHECKER	DATE	

BA 16/97

Chapter 3 Figure 3/1 (Page 3/2)

$(h+d) = 2280 - (11290 - 10020) = 1010\,mm$

$d = 380\,mm$

$L = 9000\,mm$

$\therefore$ P.A.L = 44 tonnes

REF. 3.8 $\quad \frac{SPAN}{RISE} = \frac{9000}{1865} = 4.83$

FIG. 3/3 $\quad F_{SR} = 0.875$

REF 3.12 (Page 3/3) $\quad \frac{R_Q}{R_C} = \frac{1590}{1865} = 0.85$

FIG. 3/4 $\quad$ Profile factor, $F_P = 0.75$

FIG. 3.13 $\quad$ Material factor, $F_m = \frac{(F_b \times d) + (F_f \times h)}{(h+d)}$

TABLE 3/1 $\quad$ Barrel factor, $F_b = 1.0$

TABLE 3/2 $\quad$ Fill factor, $F_f = 0.7$

$\therefore F_m = \frac{(1.0 \times 380) + (0.7 \times (1010 - 380))}{1010} = 0.81$

REF. 3.16 $\quad$ Joint factor, $F_J = F_W \times F_{MO} \times F_d$

TABLE 3/3 $\quad$ Width factor, $F_W = 1.0$

TABLE 3/4 $\quad$ Mortar factor, $F_{MO} = 1.0$

TABLE 3/5 $\quad$ Depth factor, $F_d = 0.79$

$\therefore F_J = 1.0 \times 1.0 \times 0.79 = 0.79$

REF. 3.17 $\quad$ Condition factor, $F_{CM} = 0.95$

BABTIE			CALCULATION SHEET	
OFFICE EDINBURGH	PAGE No.	4	CONT'N PAGE No.	4.1
JOB No. & TITLE NAR -WP3: MEXE ASSESSMENTS	ORIGINATOR	[redacted]	TE	28/09/03
SECTION C20/40 MONTGREENAN STATION	CHECKER		DATE	

REF 3.24 Modified Axle load = $F_{SR} \times F_P \times F_M \times F_J \times F_{CM} \times PAL$

$MAL = 0.875 \times 0.75 \times 0.81 \times 0.79 \times 0.95 \times 44$

$= \underline{17.55 \text{ tonnes}}$

FIG. 3/5a & b (ASSUMING AXLE LIFT-OFF)

SPAN = 9000mm

Single axle, $A_{f1} = 1.55$ Load capacity$_1$ → 27.2t (>11.5t) vac

Double axle, $A_{f2} = 0.76$ Load capacity$_2$ → 13.3t (>10t) vac

Triple axle, $A_{f3} = 0.88$ Load capacity$_3$ → 15.4t (>8t) vac

∴ The structure passes the max gross vehicle weight capacity of an overall 40/44 t vehicle, well. vac

BABTIE				CALCULATION SHEET
OFFICE EDINBURGH	PAGE No. 4.1		CONT'N PAGE No.	4.2
JOB No. & TITLE N.A.C.–WP3: MEXE ASSESSMENTS	ORIGINATOR	[redacted]	DATE	11/11/05
SECTION C20/40 MONTGREENAN STATION (LOWER BOUND)	CHECKER		DATE	

BA 16/97

The fill depth is taken to be equal to that of the barrel, for conservative, lower bound calculations.

Chapter 3, FIG. 3/1 (Page 3/2) $d = 380\,mm \Rightarrow h = 380\,mm$

$\therefore h + d = 760\,mm$

$L = 9000\,mm$

$\therefore$ P.A.L. = 24 tonnes.

REF. 3.8 $\frac{SPAN}{RISE_c} = \frac{9000}{1865} = 4.83$

FIG. 3/3 $F_{SR} = 0.875$

REF 3.12 (page 3/3) $\frac{R_Q}{R_c} = \frac{1590}{1865} = 0.85$

FIG. 3/4 Profile Factor, $F_p = 0.75$

FIG. 3.13 Material factor, $F_m = \frac{(F_b \times d) + (F_f \times h)}{(h + d)}$

TABLE 3/1 Barrel factor, $F_b = 1.0$

TABLE 3/2 Fill factor, $F_f = 0.7$

$\therefore F_m = \frac{(1.0 \times 380) + (0.7 \times 380)}{760} = 0.85$

REF. 3.16 Joint factor, $F_j = F_w \times F_{mo} \times F_d$

TABLE 3/3 Width factor, $F_w = 1.0$

TABLE 3/4 Mortar factor, $F_{mo} = 1.0$

TABLE 3/5 Depth factor, $F_d = 0.79$

BABTIE			CALCULATION SHEET		
OFFICE	EDINBURGH	PAGE No.	4.2	CONT'N PAGE No.	
JOB No. & TITLE	N.A.C. - WP3 : MEXE ASSESSMENTS	ORIGINATOR	[redacted]	DATE	11/11/03
SECTION	C20/40 MONTGREENAN STATION (LOWER SOUND)	CHECKER		DATE	

$\therefore F_j = 1.0 \times 1.0 \times 0.79 = 0.79$

REF 3.17 Condition Factor, $F_{cu} = 0.95$

REF 3.24 modified Axle load $= F_{sc} \times F_p \times F_m \times F_j \times F_{cu} \times PAL$

$M.A.L. = 0.875 \times 0.75 \times 0.85 \times 0.79 \times 0.95 \times 24$

$= 10.047$ tonnes $\simeq$ 10 tonnes

FIG. 3/5a & b (assuming axle left-right)

SPAN = 9m

SINGLE AXLE, $A_{f1} = 1.55$ LOAD CAPACITY 1 → 15.5 tonnes (>11.5t)

DOUBLE AXLE, $A_{f2} = 0.76$ LOAD CAPACITY 2 → 7.6 tonnes (<10t)

TRIPLE AXLE, $A_{f3} = 0.88$ LOAD CAPACITY 3 → 8.8 tonnes (>8t)

TABLE 3/6 ∴ TOTAL LOAD CAPACITY = 18 tonnes

BABTIE **CALCULATION SHEET**

OFFICE	EDINBURGH	PAGE No.	5	CONT'N PAGE No.	
JOB No. & TITLE	N.A.C. - WP3 : REDUCED LEVELS	ORIGINATOR	[redacted]	DATE	15/7/03
SECTION	C20/40 MONTGREENAN STATION	CHECKER	[redacted]	DATE	

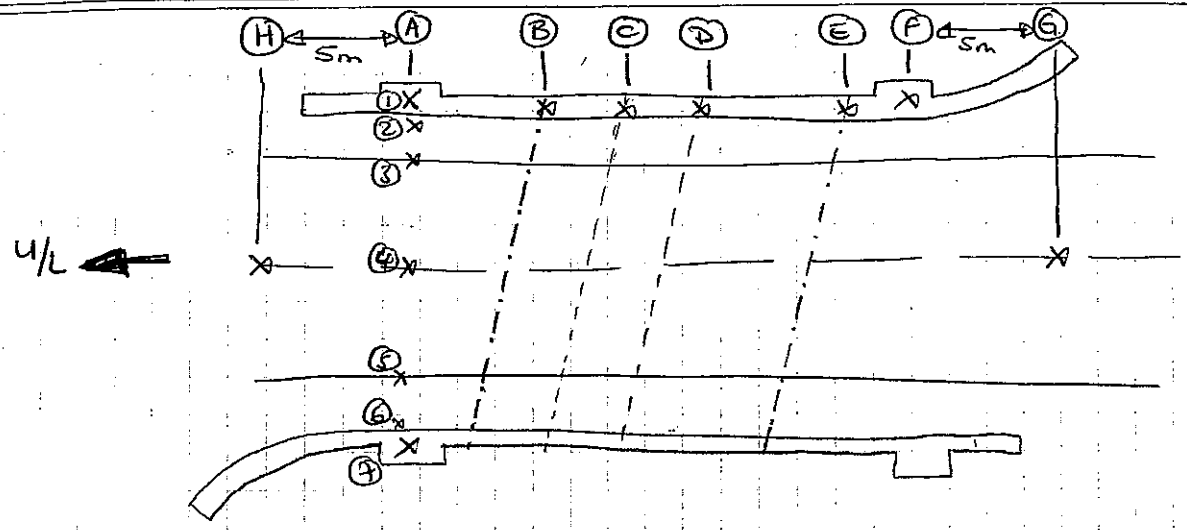

(A) & (F) PILASTERS
(B) & (E) SPLINGING
(D) MID-SPAN
(C) 1/4 POINT SPAN
(G) 5m down from (F)
(H) 5m down from (A).

*TAKING AN ARBITRARY LEVEL AT POINT (D4) AT A HEIGHT OF 10.0m.
(LEVEL OF INSTRUMENT VIEW PLANE @ Arbitrary 11.59m)

	1	2	3	4	5	6	7
A	11.220	9.920	9.865	9.910	9.935	9.975	11.220
B	11.245	9.960	—	—	—	—	—
C	11.265	—	—	—	—	—	—
D	11.290	10.095	10.020	10.000	10.010	10.080	11.335
E	—	—	—	—	—	—	—
F	11.240	9.970	9.900	9.895	9.885	9.965	11.130
G	—	—	—	9.520	—	—	—
H	—	—	—	9.575	—	—	—

BABTIE **CALCULATION SHEET**

OFFICE	EDINBURGH	PAGE No.	6	CONT'N PAGE No.	
JOB No. & TITLE	NAC. - WP3 : ELEVATION DIMENSIONS	ORIGINATOR	[redacted]	DATE	15/7/03
SECTION	C20/40 MONTGREENAN STATION	CHECKER		DATE	

→ SCALING DISTANCE BETWEEN PILASTERS FROM DRAWING, TO BE 11.40m

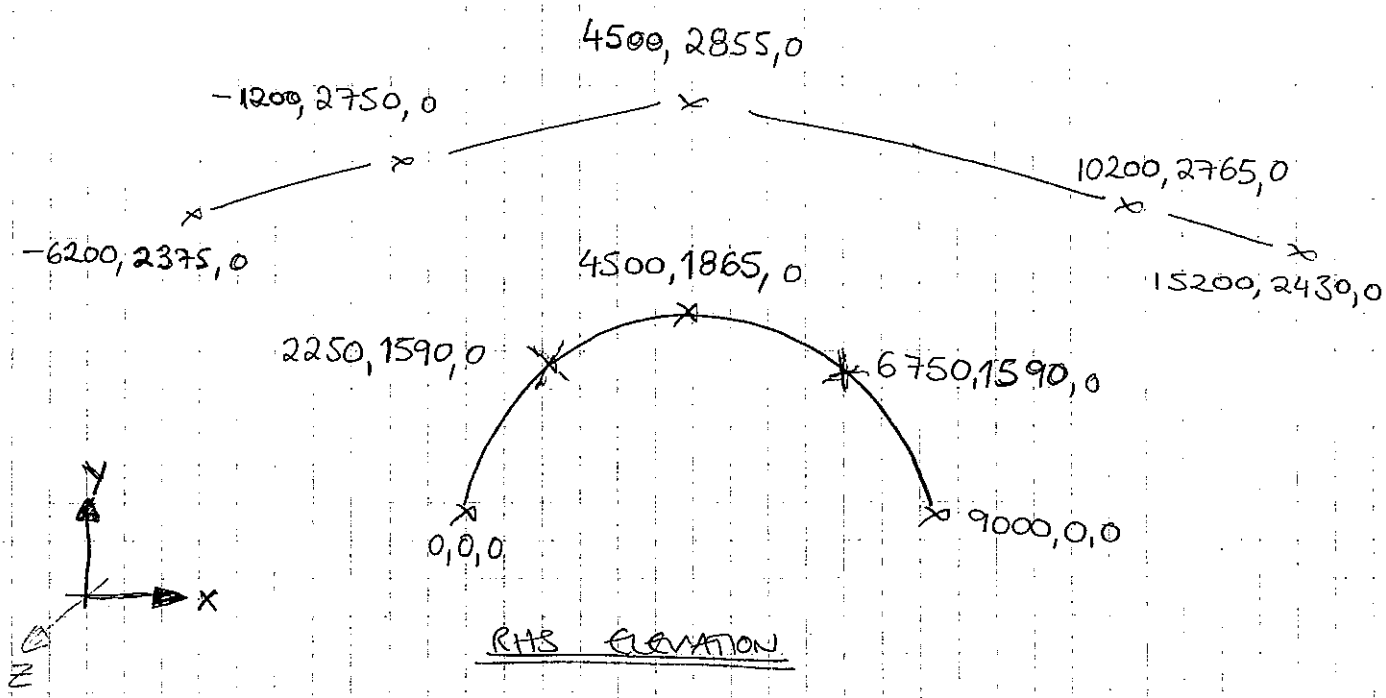

RHS ELEVATION

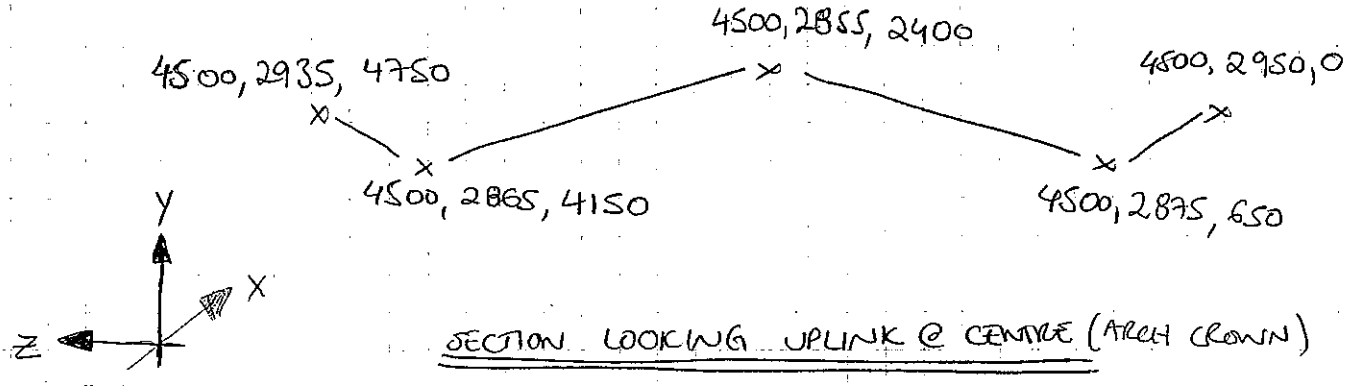

SECTION LOOKING UPLINK @ CENTRE (ARCH CROWN)

Babtie CALCULATION SHEET

OFFICE	Edinburgh	JOB No	0008200	PAGE No	7	REVISION
TITLE	NAC Bridge Assessments – WP3			SECTION	C20/40 MONTGREENAN STN.	

REVISION		A									
ORIGINATOR	DATE	[redacted]	07/03								
ARITH CHK	DATE										
ENG CHK	DATE										

REF	CALCULATION	OUTPUT

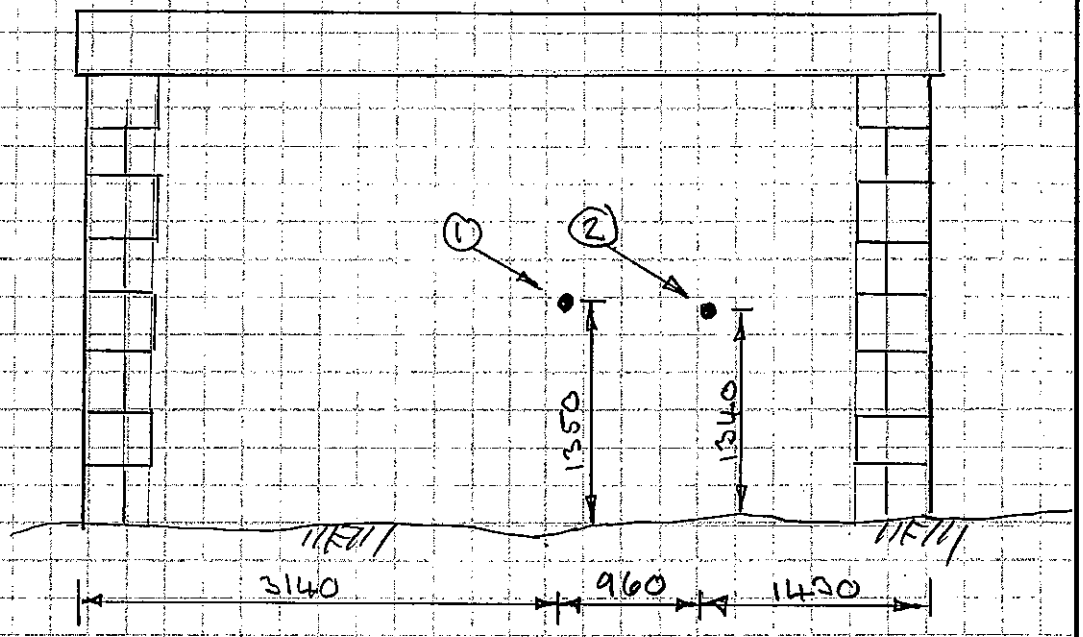

CORE 1 → 1380mm THICK WALL

CORE 2 → STILL IN SOLID MASONRY AT 2200mm

DOWNLINK (S.W.) ABUTMENT

CORING DETAILS

BABTIE			CALCULATION SHEET		
OFFICE	EDINBURGH	PAGE No.	8	CONT'N PAGE No.	
JOB No. & TITLE	NAZ - WF3	ORIGINATOR	[redacted]	DATE	26/8/03
SECTION	C20/40 MONTGREENAN STATION	CHECKER		DATE	

ABUTMENT GEOMETRY :-

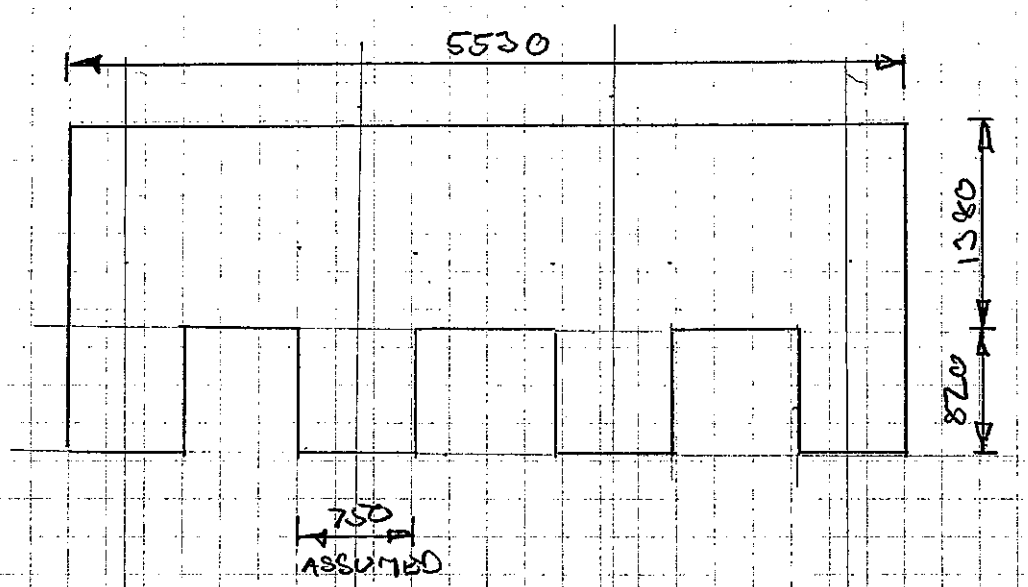

TAKE EFFECTIVE THICKNESS = $2\bar{y}$

$$= 2\left[\frac{(5530 \times 1380 \times 690) + (4 \times 820 \times 750 \times 1790)}{(5530 \times 1380) + (4 \times 820 \times 750)}\right]$$

$= 1916\,mm.$

BD21/01, Pt 3

$h = (h+d) - d.$

$(h+d) = 1010mm$ $d = 380mm$

$\therefore h = 1010 - 380 = 630mm.$

LANE WIDTHS

HA LOADING

FIG. 6.3 Single wheel load $\rightarrow 1.5 + h = 1.5 + 0.630 = 2.130m$ $(\times 2 = 4.260m)$.

Combined wheel load $\rightarrow 1.8 + 1.5 + h = 1.8 + 1.5 + 0.630$
$= 3.93m$

$3.930m < 4.260m$ $\therefore$ The combined wheel load is the worst case for loading.

Curtailing of the combined load lane width:

Effective lane width $\Rightarrow 300 + 150 + 1800 + 150 + 600 + \frac{630}{2}$

$= 3.315mm = \underline{3.315m}.$

HB LOADING

$W_L = 1.5 + 3 + h = 1.5 + 3 + 0.630 = 5.130m$

Curtailed width, $W_{L\,eff} = 300 + 250 + 3000 + 150 + 600 + \frac{630}{2}$

$= 4615mm = \underline{4.615m}$

Montgreenan Station

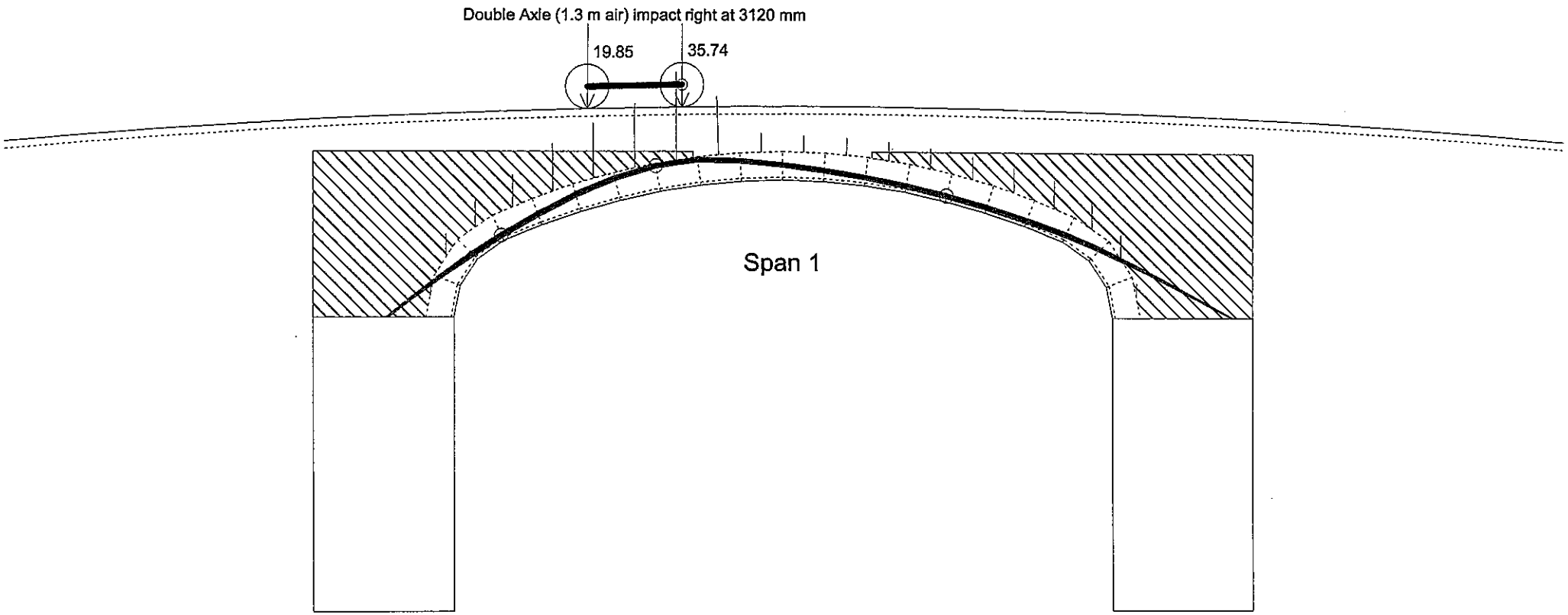

gammaFl dead load: 1.00 Double Axle (1.3 m air) impact right @ 3120 [mm]
gammaFl superimposed: 1.00
gammaFl live load: 1.90
gammaF3 load effect: 1.10
gammaM material: 1.50
File path: C:\NACwprkpackage3\MontgreenanHA.brg

NAME: Montgreenan Station
LOCATION: North Ayrshire
NUMBER: C20/40
Babtie Group Ltd.
DATE: 28 July 2003
Printed on: Tuesday, August 26, 2003 11:12:14

Bridge Name: Montgreenan Station Bridge Location: North Ayrshire
Bridge Number: C20/40
Number of spans: 1

SAFETY FACTORS
Factor for deadload: 1.00 Factor for superimposed deadload: 1.00 Factor for surfacing: 1.00
Factor for live load: 1.90 Factor for load effect: 1.10 Factor for material strength: 1.50

APPLIED LOAD CASES
1. Double Axle (1.3 m air) impact righ Total weight: 176.58 [kN] Position: 3120 [mm]

Applied distribution mode: Archie/Multi
Applied live load pressure: Active pressure

STRUCTURE PROPERTIES
Road shape: Curved (3-point method)
Road points: (-6200, 2375) (4500, 2855) (15200, 2430)
Depth of surfacing: 100 Depth of overlay: 0
Surface unit weight: 24.00 [kN/m^3] Overlay unit weight: 15.00 [kN/m^3]
Lane width: 3315

Fill unit weight: 18.00 [kN/m^3] Fill phi: 30 [degree]

Left abutment Base level:-4000 [mm] Height: 0 [mm] Width: 1916 [mm]
Right abutment Base level:-4000 [mm] Height: 0 [mm] Width: 1916 [mm]

SPAN 1
Shape Three-centred
Span: 9000 [mm] Rise: 1865 [mm] Quarter Rise: 1590 [mm]
Ring Thickness at crown: 380 [mm] Ring Thickness at springing: 380 [mm] Mortar loss: 40 [mm]
Masonry Unit Weight: 23.00 [kN/m3] Masonry Strength: 9.00 [MPa]

Segment	Intrados.x	Intrados.z	Extrados.x	Extrados.z	Roadlevel	Fx dead	Fz dead	My dead	Fx live	Fz live	My live	Fx passive	Fx total	Fz total	My total	Thrust in	Thrust out	Extra-Thrust	
0	0	0	-380	0	2749	0.00	0.00	0.00	0.00	0.00	0.00	0.00	-379.63	-284.66	-248.84	850	898	-558	***
1	83	429	-269	571	2753	0.00	-10.64	1.98	0.00	-0.00	0.00	0.00	-379.63	-274.02	-105.83	234	300	40	
2	321	796	47	1060	2765	0.00	-18.46	1.42	0.00	-0.00	0.00	0.00	-379.63	-255.57	-25.95	21	95	245	
3	678	1048	523	1394	2782	0.00	-21.19	2.38	0.00	-0.00	0.00	0.00	-379.63	-234.38	-16.25	-0	74	266	
4	1198	1262	1064	1618	2800	0.00	-20.82	4.26	0.00	-3.04	1.01	0.00	-379.63	-210.51	-49.65	80	151	189	
5	1730	1445	1617	1808	2815	0.00	-18.72	4.03	0.00	-17.22	4.24	0.00	-379.63	-174.58	-81.45	162	231	109	
6	2272	1595	2181	1964	2828	0.00	-16.87	3.82	0.00	-24.95	5.36	0.00	-379.63	-132.75	-105.50	230	297	43	
7	2822	1713	2754	2087	2838	0.00	-15.33	3.65	0.00	-33.40	8.87	0.00	-379.63	-84.02	-119.58	275	340	-0	***
8	3378	1797	3332	2175	2847	0.00	-14.04	3.51	0.00	-52.75	13.31	0.00	-379.63	-17.23	-113.87	269	332	8	
9	3938	1848	3915	2227	2852	0.37	-13.21	3.48	0.95	-31.32	6.11	0.00	-380.95	27.31	-88.69	203	266	74	
10	4500	1865	4500	2245	2855	0.12	-12.92	3.56	0.02	-1.83	0.11	0.00	-381.08	42.06	-62.15	131	195	145	
11	5062	1848	5085	2227	-250616	-0.12	-12.93	3.72	0.00	0.00	0.00	0.00	-380.97	54.99	-41.30	76	140	200	
12	5622	1797	5668	2175	2853	-0.37	-13.26	3.97	0.00	0.00	0.00	0.00	-380.59	68.25	-26.27	36	100	240	
13	6178	1713	6246	2087	2847	0.00	-14.12	4.41	0.00	0.00	0.00	0.00	-380.59	82.37	-16.91	11	76	264	
14	6728	1595	6819	1964	2840	0.00	-15.44	4.97	0.00	0.00	0.00	0.00	-380.59	97.81	-12.82	-0	65	275	
15	7270	1445	7383	1808	2830	0.00	-17.01	5.64	0.00	0.00	0.00	0.00	-380.59	114.82	-13.50	1	67	273	
16	7802	1262	7936	1618	2817	0.00	-18.88	6.44	0.00	0.00	0.00	0.00	-380.59	133.70	-18.42	12	79	261	
17	8322	1048	8477	1394	2803	0.00	-21.01	7.37	0.00	0.00	0.00	0.00	-380.59	154.71	-27.01	32	100	240	
18	8679	796	8953	1060	2788	0.00	-21.37	7.00	0.00	0.00	0.00	0.00	-380.59	176.08	-67.91	141	206	134	
19	8917	429	9269	571	2777	0.00	-18.59	7.26	0.00	0.00	0.00	0.00	-380.59	194.67	-171.82	505	559	-219	***
20	9000	0	9380	0	2774	0.00	-10.69	6.13	0.00	0.00	0.00	0.00	-380.59	205.36	-329.29	1586	1621	-1281	***

Montgreenan Station

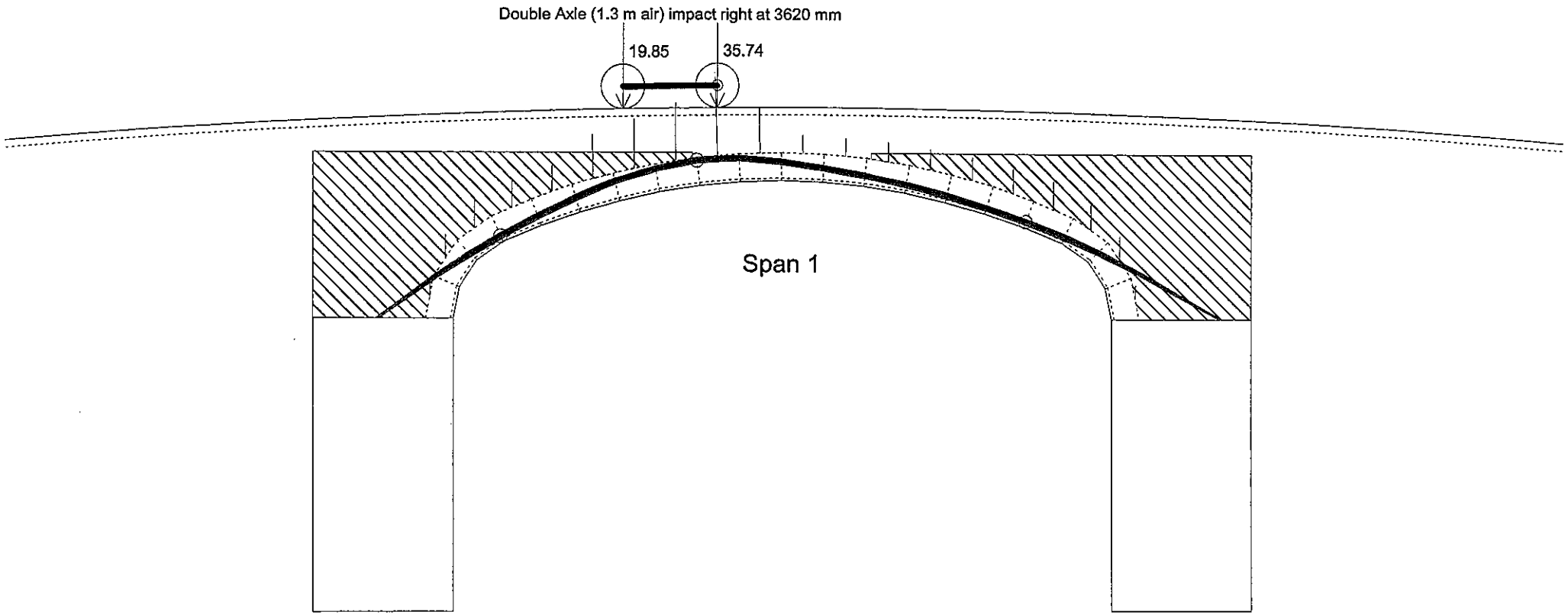

gammaFl dead load: 1.15 Double Axle (1.3 m air) impact right @ 3620 [mm]
gammaFl superimposed: 1.20
gammaFl live load: 1.90
gammaF3 load effect: 1.10
gammaM material: 1.50
File path: C:\NACwprkpackage3\MontgreenanHA.brg

NAME: Montgreenan Station
LOCATION: North Ayrshire
NUMBER: C20/40
Babtie Group Ltd.
DATE: 28 July 2003
Printed on: Tuesday, August 26, 2003 11:12:51

12

Bridge Name: Montgreenan Station Bridge Location: North Ayrshire
Bridge Number: C20/40
Number of spans: 1

SAFETY FACTORS
Factor for deadload: 1.15 Factor for superimposed deadload: 1.20 Factor for surfacing: 1.75
Factor for live load: 1.90 Factor for load effect: 1.10 Factor for material strength: 1.50

APPLIED LOAD CASES
1. Double Axle (1.3 m air) impact right Total weight: 176.58 [kN] Position: 3620 [mm]

Applied distribution mode: Archie/Multi
Applied live load pressure: Active pressure

STRUCTURE PROPERTIES
Road shape: Curved (3-point method)
Road points: (-6200, 2375) (4500, 2855) (15200, 2430)
Depth of surfacing: 100 Depth of overlay: 0
Surface unit weight: 24.00 [kN/m^3] Overlay unit weight: 15.00 [kN/m^3]
Lane width: 3315

Fill unit weight: 18.00 [kN/m^3] Fill phi: 30 [degree]

Left abutment Base level:-4000 [mm] Height: 0 [mm] Width: 1916 [mm]
Right abutment Base level:-4000 [mm] Height: 0 [mm] Width: 1916 [mm]

SPAN 1
Shape Three-centred
Span: 9000 [mm] Rise: 1865 [mm] Quarter Rise: 1590 [mm]
Ring Thickness at crown: 380 [mm] Ring Thickness at springing: 380 [mm] Mortar loss:40 [mm]
Masonry Unit Weight: 23.00 [kN/m3] Masonry Strength: 9.00 [MPa]

Segment	Intrados.x	Intrados.z	Extrados.x	Extrados.z	Roadlevel	Fx dead	Fz dead	My dead	Fx live	Fz live	My live	Fx passive	Fx total	Fz total	My total	Thrust in	Thrust out	Extra-Thrust	
0	0	0	-380	0	2749	0.00	0.00	0.00	0.00	0.00	0.00	0.00	-440.94	-306.75	-308.26	979	1030	-690	***
1	83	429	-269	571	2753	0.00	-12.44	2.38	0.00	-0.00	0.00	0.00	-440.94	-294.31	-140.16	284	357	-17	***
2	321	796	47	1060	2765	0.00	-21.83	1.72	0.00	-0.00	0.00	0.00	-440.94	-272.48	-41.45	41	124	216	
3	678	1048	523	1394	2782	0.00	-25.28	2.86	0.00	-0.00	0.00	0.00	-440.94	-247.20	-21.02	-0	84	256	
4	1198	1262	1064	1618	2800	0.00	-24.99	5.13	0.00	-0.00	0.00	0.00	-440.94	-222.21	-47.17	55	137	203	
5	1730	1445	1617	1808	2815	0.00	-22.60	4.88	0.00	-3.12	1.12	0.00	-440.94	-196.49	-77.15	121	201	139	
6	2272	1595	2181	1964	2828	0.00	-20.51	4.66	0.00	-19.52	5.10	0.00	-440.94	-156.46	-105.40	188	265	75	
7	2822	1713	2754	2087	2838	0.00	-18.76	4.48	0.00	-26.44	5.93	0.00	-440.94	-111.26	-125.17	238	314	26	
8	3378	1797	3332	2175	2847	0.00	-17.31	4.33	0.00	-35.50	10.03	0.00	-440.94	-58.44	-134.83	266	340	-0	***
9	3938	1848	3915	2227	2852	0.48	-16.38	4.32	1.65	-54.51	14.19	0.00	-443.07	12.45	-123.78	244	317	23	
10	4500	1865	4500	2245	2855	0.15	-16.02	4.42	0.25	-24.95	4.65	0.00	-443.47	53.42	-95.15	178	252	88	
11	5062	1848	5085	2227	-250616	-0.15	-16.04	4.62	-0.00	-0.46	0.02	0.00	-443.31	69.92	-67.85	115	189	151	
12	5622	1797	5668	2175	2853	-0.48	-16.43	4.92	0.00	0.00	0.00	0.00	-442.83	86.36	-46.76	66	141	199	
13	6178	1713	6246	2087	2847	0.00	-17.41	5.42	0.00	0.00	0.00	0.00	-442.83	103.76	-31.74	32	108	232	
14	6728	1595	6819	1964	2840	0.00	-18.89	6.07	0.00	0.00	0.00	0.00	-442.83	122.65	-22.39	10	87	253	
15	7270	1445	7383	1808	2830	0.00	-20.67	6.85	0.00	0.00	0.00	0.00	-442.83	143.32	-18.18	0	78	262	
16	7802	1262	7936	1618	2817	0.00	-22.80	7.78	0.00	0.00	0.00	0.00	-442.83	166.12	-18.55	-0	79	261	
17	8322	1048	8477	1394	2803	0.00	-25.21	8.84	0.00	0.00	0.00	0.00	-442.83	191.33	-22.89	7	88	252	
18	8679	796	8953	1060	2788	0.00	-25.50	8.35	0.00	0.00	0.00	0.00	-442.83	216.83	-66.27	104	182	158	
19	8917	429	9269	571	2777	0.00	-21.99	8.60	0.00	0.00	0.00	0.00	-442.83	238.82	-184.29	444	508	-168	***
20	9000	0	9380	0	2774	0.00	-12.50	7.22	0.00	0.00	0.00	0.00	-442.83	251.32	-366.53	1437	1479	-1139	***

13

Montgreenan Station

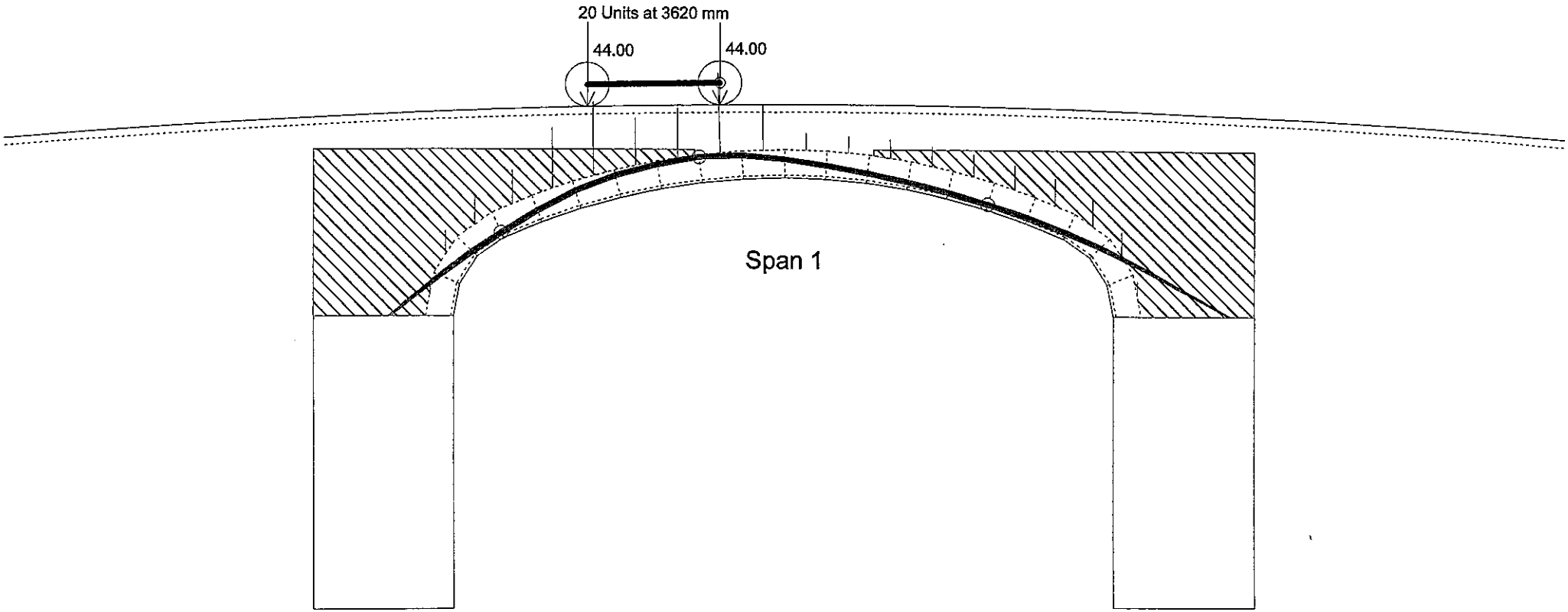

gammaFl dead load: 1.00 20 Units @ 3620 [mm]
gammaFl superimposed: 1.00
gammaFl live load: 2.00
gammaF3 load effect: 1.10
gammaM material: 1.50
File path: C:\NACwprkpackage3\MontgreenanHB.brg

NAME: Montgreenan Station
LOCATION: North Ayrshire
NUMBER: C20/40
Babtie Group Ltd.
DATE: 28 July 2003
Printed on: Tuesday, August 26, 2003 11:17:01

14

Bridge Name: Montgreenan Station Bridge Location: North Ayrshire
Bridge Number: C20/40
Number of spans: 1

SAFETY FACTORS
Factor for deadload: 1.00 Factor for superimposed deadload: 1.00 Factor for surfacing: 1.00
Factor for live load: 2.00 Factor for load effect: 1.10 Factor for material strength: 1.50

APPLIED LOAD CASES
1. 20 Units Total weight: 392.40 [kN] Position: 3620 [mm]

Applied distribution mode: Archie/Multi
Applied live load pressure: Active pressure

STRUCTURE PROPERTIES
Road shape: Curved (3-point method)
Road points: (-6200, 2375) (4500, 2855) (15200, 2430)
Depth of surfacing: 100 Depth of overlay: 0
Surface unit weight: 24.00 [kN/m^3] Overlay unit weight: 15.00 [kN/m^3]
Lane width: 4615

Fill unit weight: 18.00 [kN/m^3] Fill phi: 30 [degree]

Left abutment Base level:-4000 [mm] Height: 0 [mm] Width: 1916 [mm]
Right abutment Base level:-4000 [mm] Height: 0 [mm] Width: 1916 [mm]

SPAN 1
Shape Three-centred
Span: 9000 [mm] Rise: 1865 [mm] Quarter Rise: 1590 [mm]
Ring Thickness at crown: 380 [mm] Ring Thickness at springing: 380 [mm] Mortar loss:40 [mm]
Masonry Unit Weight: 23.00 [kN/m3] Masonry Strength: 9.00 [MPa]

Segment	Intrados.x	Intrados.z	Extrados.x	Extrados.z	Roadlevel	Fx dead	Fz dead	My dead	Fx live	Fz live	My live	Fx passive	Fx total	Fz total	My total	Thrust in	Thrust out	Extra-Thrust	
0	0	0	-380	0	2749	0.00	0.00	0.00	0.00	0.00	0.00	0.00	-389.26	-298.97	-250.32	812	862	-522	***
1	83	429	-269	571	2753	0.00	-10.64	1.98	0.00	-0.00	0.00	0.00	-389.26	-288.33	-104.27	218	287	53	
2	321	796	47	1060	2765	0.00	-18.46	1.42	0.00	-0.00	0.00	0.00	-389.26	-269.87	-24.25	14	91	249	
3	678	1048	523	1394	2782	0.00	-21.19	2.38	0.00	-0.00	0.00	0.00	-389.26	-248.69	-17.34	-0	76	264	
4	1198	1262	1064	1618	2800	0.00	-20.82	4.26	0.00	-4.84	1.61	0.00	-389.26	-223.02	-55.79	89	163	177	
5	1730	1445	1617	1808	2815	0.00	-18.72	4.03	0.00	-27.41	6.75	0.00	-389.26	-176.89	-89.58	176	247	93	
6	2272	1595	2181	1964	2828	0.00	-16.87	3.82	0.00	-39.26	8.32	0.00	-389.26	-120.76	-108.60	233	301	39	
7	2822	1713	2754	2087	2838	0.00	-15.33	3.65	0.00	-21.06	3.67	0.00	-389.26	-84.37	-116.53	260	326	14	
8	3378	1797	3332	2175	2847	0.00	-14.04	3.51	0.00	-23.96	7.56	0.00	-389.26	-46.37	-120.53	275	340	-0	***
9	3938	1848	3915	2227	2852	0.37	-13.21	3.48	1.45	-48.05	12.55	0.00	-391.08	14.90	-108.26	246	310	30	
10	4500	1865	4500	2245	2855	0.12	-12.92	3.56	0.22	-22.07	4.11	0.00	-391.42	49.88	-81.12	175	240	100	
11	5062	1848	5085	2227	-250616	-0.12	-12.93	3.72	-0.00	-0.41	0.02	0.00	-391.30	63.23	-55.82	109	174	166	
12	5622	1797	5668	2175	2853	-0.37	-13.26	3.97	0.00	0.00	0.00	0.00	-390.92	76.49	-36.68	59	125	215	
13	6178	1713	6246	2087	2847	0.00	-14.12	4.41	0.00	0.00	0.00	0.00	-390.92	90.61	-23.60	25	92	248	
14	6728	1595	6819	1964	2840	0.00	-15.44	4.97	0.00	0.00	0.00	0.00	-390.92	106.05	-16.18	6	74	266	
15	7270	1445	7383	1808	2830	0.00	-17.01	5.64	0.00	0.00	0.00	0.00	-390.92	123.06	-13.95	-0	68	272	
16	7802	1262	7936	1618	2817	0.00	-18.88	6.44	0.00	0.00	0.00	0.00	-390.92	141.93	-16.37	5	74	266	
17	8322	1048	8477	1394	2803	0.00	-21.01	7.37	0.00	0.00	0.00	0.00	-390.92	162.94	-22.87	19	89	251	
18	8679	796	8953	1060	2788	0.00	-21.37	7.00	0.00	0.00	0.00	0.00	-390.92	184.32	-63.42	123	191	149	
19	8917	429	9269	571	2777	0.00	-18.59	7.26	0.00	0.00	0.00	0.00	-390.92	202.91	-169.23	478	534	-194	***
20	9000	0	9380	0	2774	0.00	-10.69	6.13	0.00	0.00	0.00	0.00	-390.92	213.59	-330.58	1530	1565	-1225	***

15

Montgreenan Station

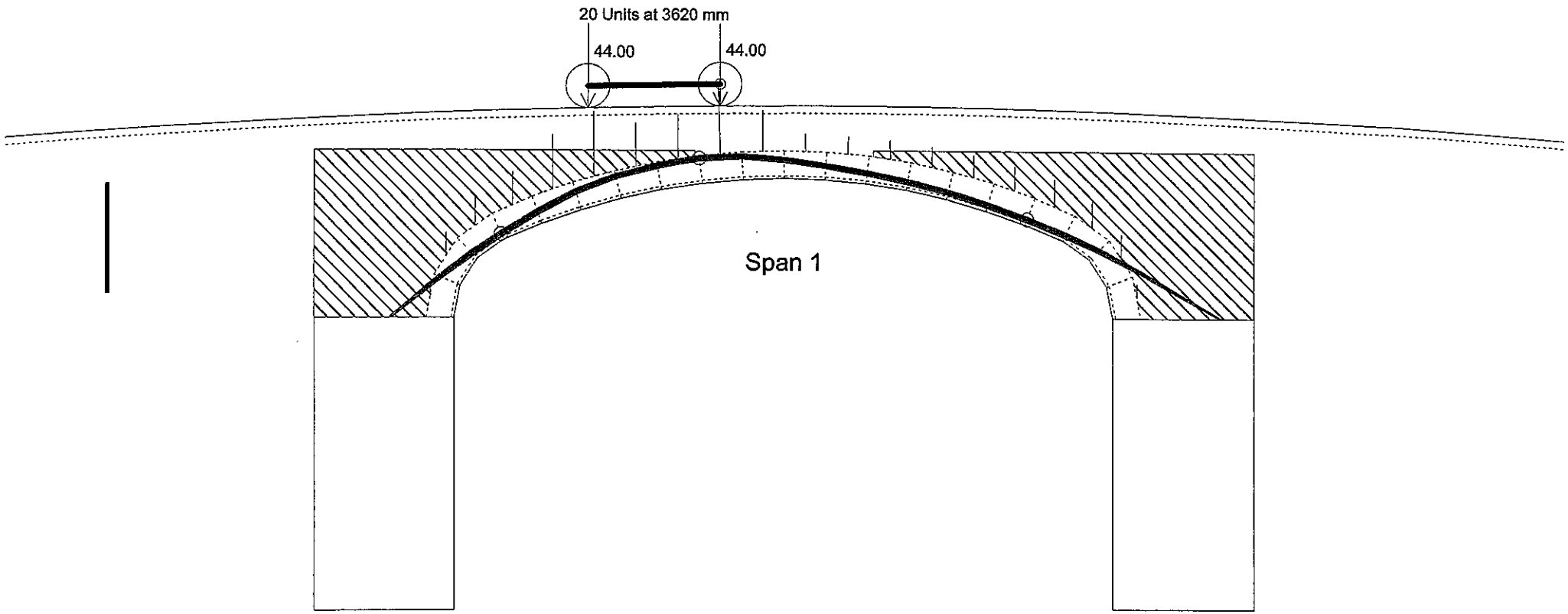

gammaFl dead load: 1.15 20 Units @ 3620 [mm]
gammaFl superimposed: 1.20
gammaFl live load: 2.00
gammaF3 load effect: 1.10
gammaM material: 1.50
File path: C:\NACwprkpackage3\MontgreenanHB.brg

NAME: Montgreenan Station
LOCATION: North Ayrshire
NUMBER: C20/40
Babtie Group Ltd.
DATE: 28 July 2003
Printed on: Tuesday, August 26, 2003 11:17:41

16

Bridge Name: Montgreenan Station Bridge Location: North Ayrshire
Bridge Number: C20/40
Number of spans: 1

SAFETY FACTORS
Factor for deadload: 1.15 Factor for superimposed deadload: 1.20 Factor for surfacing: 1.75
Factor for live load: 2.00 Factor for load effect: 1.10 Factor for material strength: 1.50

APPLIED LOAD CASES
1. 20 Units Total weight: 392.40 [kN] Position: 3620 [mm]

Applied distribution mode: Archie/Multi
Applied live load pressure: Active pressure

STRUCTURE PROPERTIES
Road shape: Curved (3-point method)
Road points: (-6200, 2375) (4500, 2855) (15200, 2430)
Depth of surfacing: 100 Depth of overlay: 0
Surface unit weight: 24.00 [kN/m^3] Overlay unit weight: 15.00 [kN/m^3]
Lane width: 4615

Fill unit weight: 18.00 [kN/m^3] Fill phi: 30 [degree]

Left abutment Base level:-4000 [mm] Height: 0 [mm] Width: 1916 [mm]
Right abutment Base level:-4000 [mm] Height: 0 [mm] Width: 1916 [mm]

SPAN 1
Shape Three-centred
Span: 9000 [mm] Rise: 1865 [mm] Quarter Rise: 1590 [mm]
Ring Thickness at crown: 380 [mm] Ring Thickness at springing: 380 [mm] Mortar loss:40 [mm]
Masonry Unit Weight: 23.00 [kN/m3] Masonry Strength: 9.00 [MPa]

Segment	Intrados.x	Intrados.z	Extrados.x	Extrados.z	Roadlevel	Fx dead	Fz dead	My dead	Fx live	Fz live	My live	Fx passive	Fx total	Fz total	My total	Thrust in	Thrust out	Extra-Thrust	
0	0	0	-380	0	2749	0.00	0.00	0.00	0.00	0.00	0.00	0.00	-429.41	-332.13	-277.96	809	865	-525	***
1	83	429	-269	571	2753	0.00	-12.44	2.38	0.00	-0.00	0.00	0.00	-429.41	-319.68	-117.17	218	294	46	
2	321	796	47	1060	2765	0.00	-21.83	1.72	0.00	-0.00	0.00	0.00	-429.41	-297.86	-29.08	14	99	241	
3	678	1048	523	1394	2782	0.00	-25.28	2.86	0.00	-0.00	0.00	0.00	-429.41	-272.58	-21.04	-0	84	256	
4	1198	1262	1064	1618	2800	0.00	-24.99	5.13	0.00	-4.84	1.61	0.00	-429.41	-242.74	-62.01	87	168	172	
5	1730	1445	1617	1808	2815	0.00	-22.60	4.88	0.00	-27.41	6.75	0.00	-429.41	-192.73	-97.73	170	248	92	
6	2272	1595	2181	1964	2828	0.00	-20.51	4.66	0.00	-39.26	8.32	0.00	-429.41	-132.97	-118.17	226	301	39	
7	2822	1713	2754	2087	2838	0.00	-18.76	4.48	0.00	-21.06	3.67	0.00	-429.41	-93.15	-127.03	253	326	14	
8	3378	1797	3332	2175	2847	0.00	-17.31	4.33	0.00	-23.96	7.56	0.00	-429.41	-51.88	-131.53	268	340	-0	***
9	3938	1848	3915	2227	2852	0.48	-16.38	4.32	1.45	-48.05	12.55	0.00	-431.34	12.55	-119.37	242	314	26	
10	4500	1865	4500	2245	2855	0.15	-16.02	4.42	0.22	-22.07	4.11	0.00	-431.72	50.64	-91.98	177	249	91	
11	5062	1848	5085	2227	-250616	-0.15	-16.04	4.62	-0.00	-0.41	0.02	0.00	-431.56	67.09	-66.07	116	188	152	
12	5622	1797	5668	2175	2853	-0.48	-16.43	4.92	0.00	0.00	0.00	0.00	-431.07	83.52	-45.97	68	141	199	
13	6178	1713	6246	2087	2847	0.00	-17.41	5.42	0.00	0.00	0.00	0.00	-431.07	100.93	-31.54	34	108	232	
14	6728	1595	6819	1964	2840	0.00	-18.89	6.07	0.00	0.00	0.00	0.00	-431.07	119.82	-22.37	13	87	253	
15	7270	1445	7383	1808	2830	0.00	-20.67	6.85	0.00	0.00	0.00	0.00	-431.07	140.49	-17.93	2	77	263	
16	7802	1262	7936	1618	2817	0.00	-22.80	7.78	0.00	0.00	0.00	0.00	-431.07	163.28	-17.65	-0	77	263	
17	8322	1048	8477	1394	2803	0.00	-25.21	8.84	0.00	0.00	0.00	0.00	-431.07	188.50	-20.94	5	84	256	
18	8679	796	8953	1060	2788	0.00	-25.50	8.35	0.00	0.00	0.00	0.00	-431.07	214.00	-62.30	100	175	165	
19	8917	429	9269	571	2777	0.00	-21.99	8.60	0.00	0.00	0.00	0.00	-431.07	235.98	-176.56	433	496	-156	***
20	9000	0	9380	0	2774	0.00	-12.50	7.22	0.00	0.00	0.00	0.00	-431.07	248.49	-353.82	1403	1445	-1105	***

Montgreenan Station

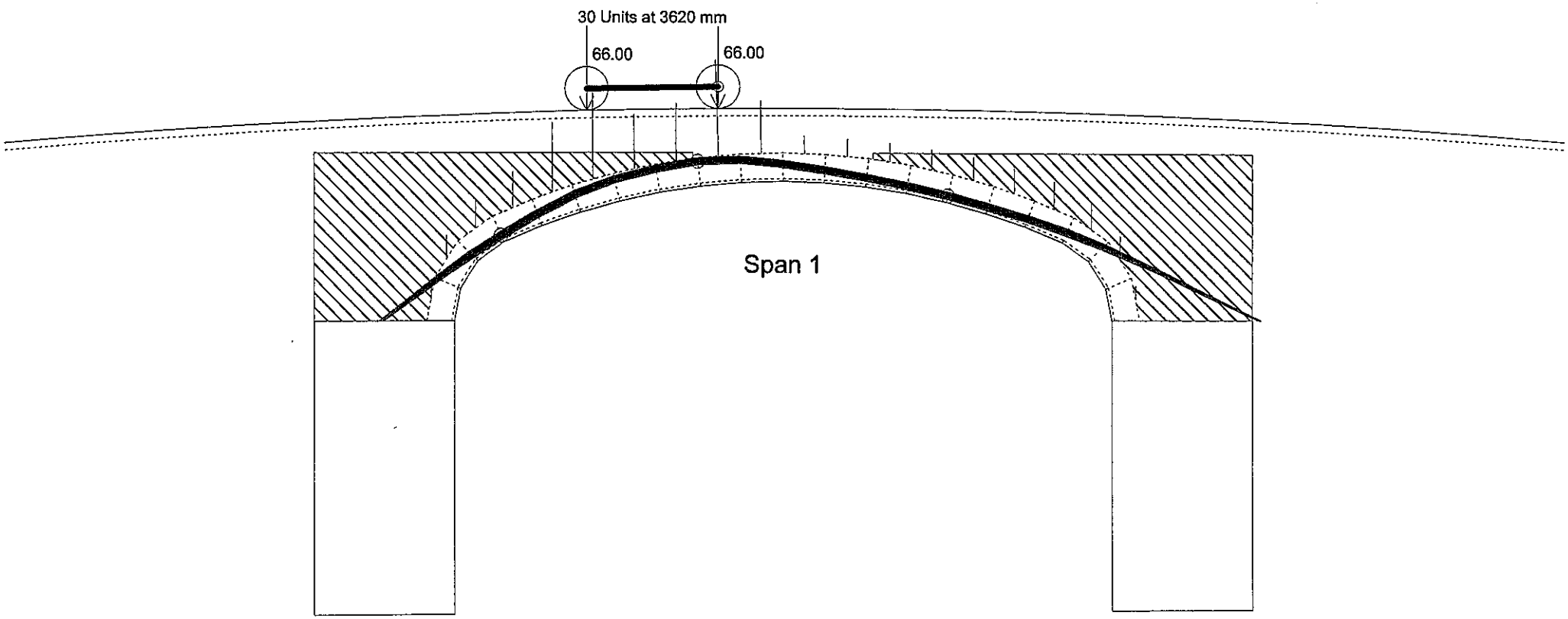

gammaFl dead load: 1.15 30 Units @ 3620 [mm]
gammaFl superimposed: 1.20
gammaFl live load: 2.00
gammaF3 load effect: 1.10
gammaM material: 1.50
File path: C:\NACwprkpackage3\MontgreenanHB.brg

NAME: Montgreenan Station
LOCATION: North Ayrshire
NUMBER: C20/40
Babtie Group Ltd.
DATE: 28 July 2003
Printed on: Tuesday, August 26, 2003 11:18:11

Bridge Name: Montgreenan Station Bridge Location: North Ayrshire
Bridge Number: C20/40
Number of spans: 1

SAFETY FACTORS
Factor for deadload: 1.15 Factor for superimposed deadload: 1.20 Factor for surfacing: 1.75
Factor for live load: 2.00 Factor for load effect: 1.10 Factor for material strength: 1.50

APPLIED LOAD CASES
1. 30 Units Total weight: 588.60 [kN] Position: 3620 [mm]

Applied distribution mode: Archie/Multi
Applied live load pressure: Active pressure

STRUCTURE PROPERTIES
Road shape: Curved (3-point method)
Road points: (-6200, 2375) (4500, 2855) (15200, 2430)
Depth of surfacing: 100 Depth of overlay: 0
Surface unit weight: 24.00 [kN/m^3] Overlay unit weight: 15.00 [kN/m^3]
Lane width: 4615

Fill unit weight: 18.00 [kN/m^3] Fill phi: 30 [degree]

Left abutment Base level:-4000 [mm] Height: 0 [mm] Width: 1916 [mm]
Right abutment Base level:-4000 [mm] Height: 0 [mm] Width: 1916 [mm]

SPAN 1
Shape Three-centred
Span: 9000 [mm] Rise: 1865 [mm] Quarter Rise: 1590 [mm]
Ring Thickness at crown: 380 [mm] Ring Thickness at springing: 380 [mm] Mortar loss: 40 [mm]
Masonry Unit Weight: 23.00 [kN/m3] Masonry Strength: 9.00 [MPa]

Segment	Intrados.x	Intrados.z	Extrados.x	Extrados.z	Roadlevel	Fx dead	Fz dead	My dead	Fx live	Fz live	My live	Fx passive	Fx total	Fz total	My total	Thrust in	Thrust out	Extra-Thrust	
0	0	0	-380	0	2749	0.00	0.00	0.00	0.00	0.00	0.00	0.00	-564.65	-404.37	-388.41	927	994	-654	***
1	83	429	-269	571	2753	0.00	-12.44	2.38	0.00	-0.00	0.00	0.00	-564.65	-391.93	-173.78	255	350	-10	***
2	321	796	47	1060	2765	0.00	-21.83	1.72	0.00	-0.00	0.00	0.00	-564.65	-370.10	-52.10	24	134	206	
3	678	1048	523	1394	2782	0.00	-25.28	2.86	0.00	-0.00	0.00	0.00	-564.65	-344.82	-35.59	-0	109	231	
4	1198	1262	1064	1618	2800	0.00	-24.99	5.13	0.00	-7.27	2.42	0.00	-564.65	-312.56	-84.69	79	186	154	
5	1730	1445	1617	1808	2815	0.00	-22.60	4.88	0.00	-41.11	10.13	0.00	-564.65	-248.85	-128.92	159	261	79	
6	2272	1595	2181	1964	2828	0.00	-20.51	4.66	0.00	-58.89	12.48	0.00	-564.65	-169.45	-152.93	211	309	31	
7	2822	1713	2754	2087	2838	0.00	-18.76	4.48	0.00	-31.58	5.51	0.00	-564.65	-119.11	-161.99	233	329	11	
8	3378	1797	3332	2175	2847	0.00	-17.31	4.33	0.00	-35.94	11.34	0.00	-564.65	-65.85	-166.62	246	340	-0	***
9	3938	1848	3915	2227	2852	0.48	-16.38	4.32	2.18	-72.08	18.82	0.00	-567.30	22.60	-148.16	215	309	31	
10	4500	1865	4500	2245	2855	0.15	-16.02	4.42	0.33	-33.10	6.16	0.00	-567.79	71.72	-108.60	144	239	101	
11	5062	1848	5085	2227	-250616	-0.15	-16.04	4.62	-0.01	-0.61	0.03	0.00	-567.63	88.38	-73.00	80	175	165	
12	5622	1797	5668	2175	2853	-0.48	-16.43	4.92	0.00	0.00	0.00	0.00	-567.15	104.81	-47.86	35	131	209	
13	6178	1713	6246	2087	2847	0.00	-17.41	5.42	0.00	0.00	0.00	0.00	-567.15	122.22	-33.06	9	105	235	
14	6728	1595	6819	1964	2840	0.00	-18.89	6.07	0.00	0.00	0.00	0.00	-567.15	141.11	-28.21	-0	97	243	
15	7270	1445	7383	1808	2830	0.00	-20.67	6.85	0.00	0.00	0.00	0.00	-567.15	161.78	-32.75	6	105	235	
16	7802	1262	7936	1618	2817	0.00	-22.80	7.78	0.00	0.00	0.00	0.00	-567.15	184.57	-46.08	28	127	213	
17	8322	1048	8477	1394	2803	0.00	-25.21	8.84	0.00	0.00	0.00	0.00	-567.15	209.79	-67.57	62	162	178	
18	8679	796	8953	1060	2788	0.00	-25.50	8.35	0.00	0.00	0.00	0.00	-567.15	235.28	-136.48	196	289	51	
19	8917	429	9269	571	2777	0.00	-21.99	8.60	0.00	0.00	0.00	0.00	-567.15	257.27	-297.17	622	697	-357	***
20	9000	0	9380	0	2774	0.00	-12.50	7.22	0.00	0.00	0.00	0.00	-567.15	269.78	-533.02	1953	1998	-1658	***

CHECK CALCULATIONS SUMMARY
C20/40 Montgreenan Staion Bridge

MEXE Results:

18 t capacity

Archie-M Results:

Full Width: 40 t
Curtailed Width: 40 t
HB Capacity: 13 units

BABTIE			CALCULATION SHEET	
OFFICE EDINBURGH	PAGE No.	B/1	CONT'N PAGE No.	
JOB No. & TITLE 8200/B – NAC WP3	ORIGINATOR	[redacted]	DATE	8/03
SECTION CHECK – MONTGREENAN	CHECKER		DATE	

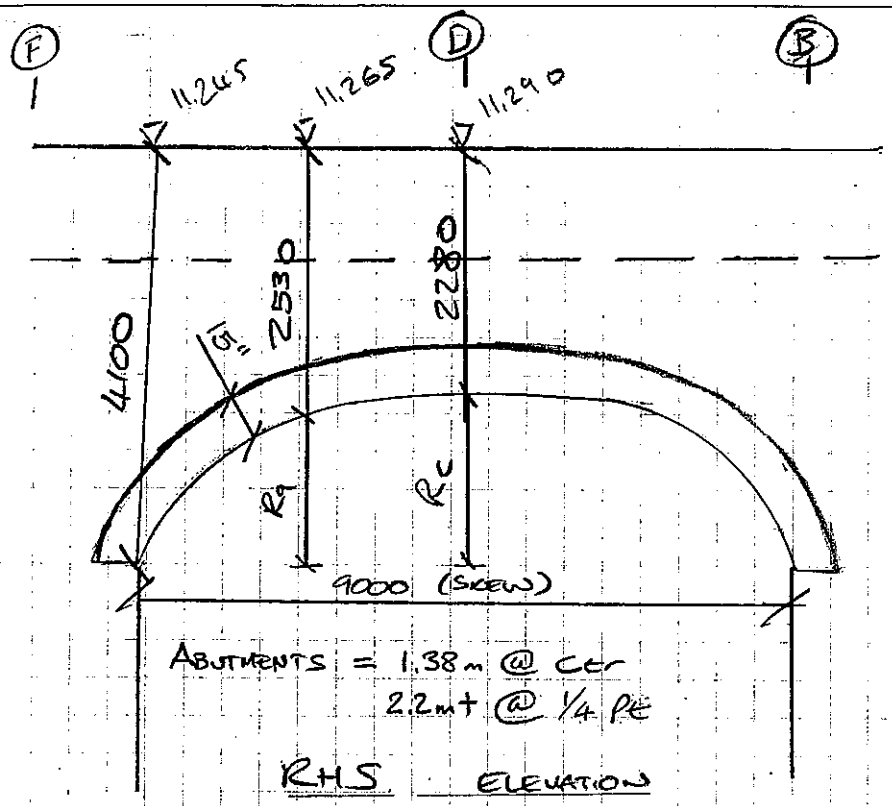

d = 15" = 381 mm

R_q = 4100 − 2530 = 1570 mm

R_c = 4100 − 2280 = 1820 mm

MORTAR LOSS = 40 mm

BD 21/01 Fig 4.3 — MASONRY STRENGTH = 15.5 N/m²

TL.1 — MASONRY UNIT WT = 22 N/m²

ASSUME 100 mm SURFACING

SURFACING UNIT WT = 23 kN/m³

Level @ Centre = 9.010 m

Level @ 1/4 Point = 8.735 m

Level @ Springing = 7.145 m

BABTIE			CALCULATION SHEET	
OFFICE EDINBURGH	PAGE No.	B/2	CONT'N PAGE No.	
JOB No. & TITLE 8200/B - NAC WP3	ORIGINATOR	[redacted]	DATE	8/03
SECTION CHECK - MONTGREENAN	CHECKER		DATE	

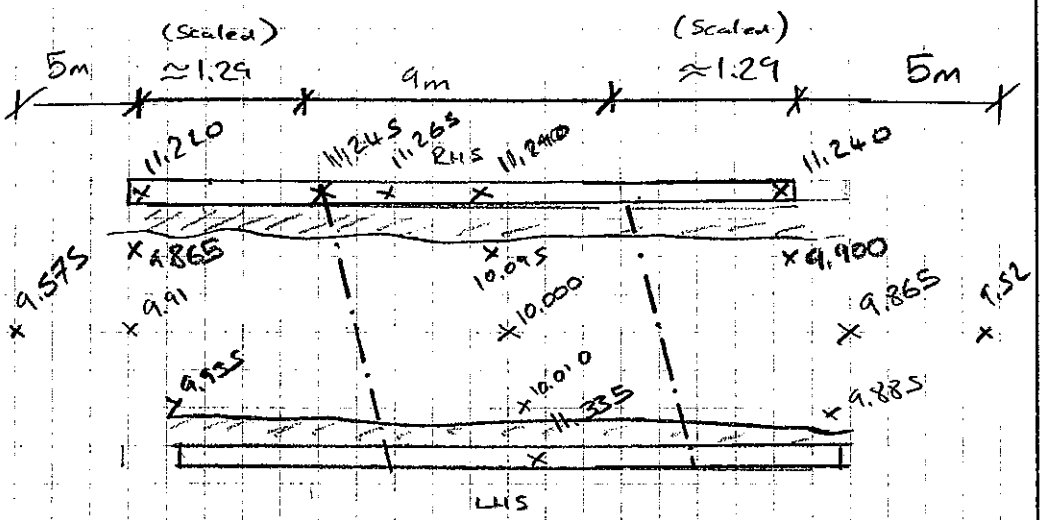

SPRINGING LEVEL = 11.265 - 4.1 = 7.165

LANE WIDTH:

FULL WIDTH

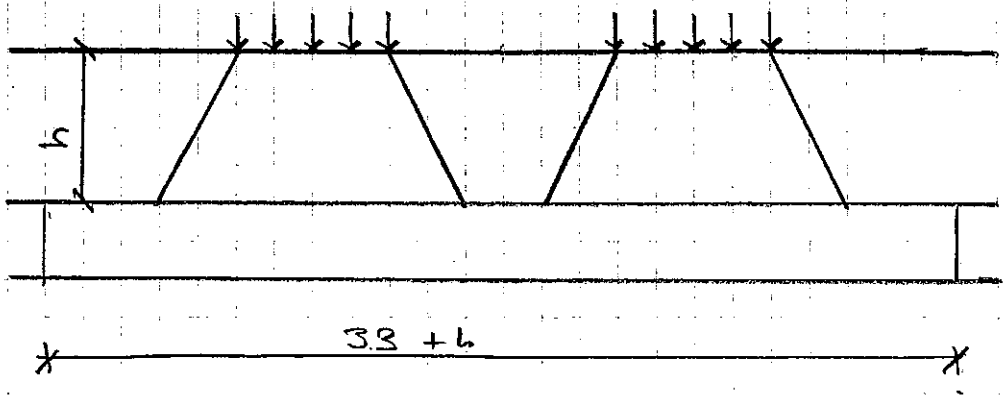

$h = 2280 - 381 - (11290 - 10000)$
$= 609\ mm$

∴ Full Lane Width = 3.3 + 0.609 = 3.909 m

Actual width = 3.5 + 0.6 + 0.65 + 0.3 + 0.3
= 5.35m > 3.909 m
∴ OK

HB WIDTH = 4.5 + h = 5.109m

BABTIE			CALCULATION SHEET
OFFICE EDINBURGH	PAGE No. B/3	CONT'N PAGE No.	
JOB No. & TITLE 8200/B - NAL WP3	ORIGINATOR [redacted]	DATE	8/03
SECTION CHECK - MONTGREENAN	CHECKER	DATE	

CURTAILED WIDTH:

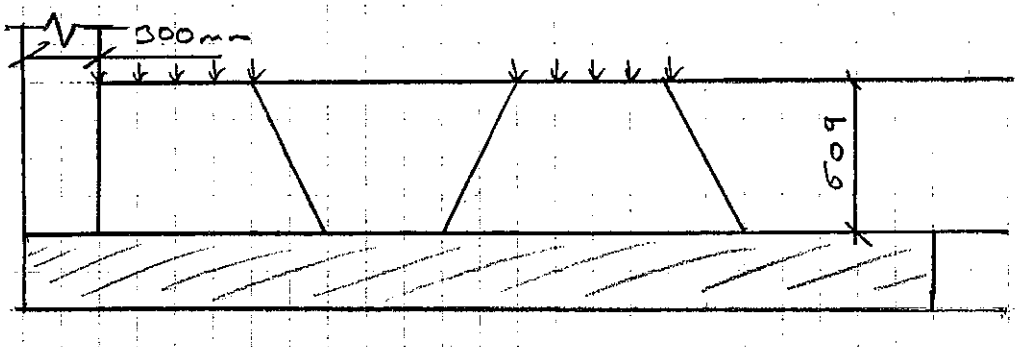

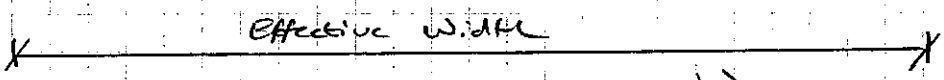

Effective width $= 3.909 - \left(\frac{1.5+h}{2}\right) + 0.3 + 0.15$

$= 3.909 - 1.055 + 0.45$

$= 3.304\ m$

HAUNCHING:

From Dwg:

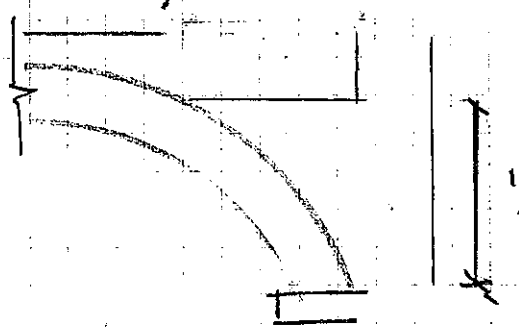

$12/68 \times 28 = 4.94' \approx 5'$

$5' = 1.52\ m$

ABUTMENTS:

2 cores: 1.38m & 2.2+ m

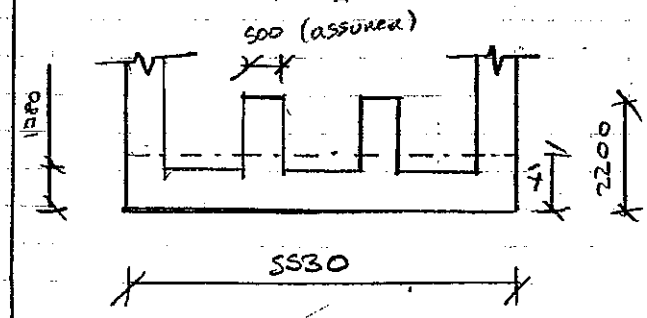

$$\bar{y} = \frac{\left[(5530 \times 1380^2/2) + (820 \times 500 \times 4 \times 1790)\right]}{(5530 \times 1380) + (820 \times 500 \times 4)}$$

$= 886$ --

$\bar{y} \times 2 = 1772$ --

North Ayrshire Bridge Assessment Programme
Package 3

MEXE Assessment to BA 16/97 Amd. 2

Bridge Name: C20/40 Montgreenan Station Bridge (Skew)

Adjusted calculations to make fill depth match arch ring depth, re: Peter Sugden's comments.

Dimensions:

Span	L=	9	m	
Rise at crown	r_c=	1.82	m	
Rise at 1/4 points	r_q=	1.57	m	
Arch barrel thickness	d=	0.381	m	
Average depth of fill	h=	0.381	m	(see note above)
	PAL=	24.7	tonne	(cl. 3.10)
Therefore	PAL=	24.7	tonne	

Modifying Factors:

Span/Rise Factor	F_{sr}=	0.87	(cl. 3.11)	
Profile Factor	F_p=	0.70	(cl. 3.12)	
Arch Barrel Factor	F_b=	1.00	(T 3/1)	(Ashlar calcareous sandstone)
Fill Factor	F_f=	0.70	(T 3/2)	(Well compacted)
Material Factor	F_m=	0.85	(cl. 3.13)	
Width Factor	F_w=	1.00	(T 3/3)	(Widths <6mm)
Mortar Factor	F_{mo}=	1.00	(T 3/4)	(Good condition)
Depth Factor	F_d=	0.80	(T 3/5)	(Joints approx. 10% of barrel)
Joint Factor	F_j=	0.80	(cl. 3.16)	
Condition Factor	F_{cM}=	0.90	(cl. 3.17 to cl. 3.24)	(Generally good)
Modified Axle Load=		9.2 tonne	(cl 3.24)	

Axle Factor	$A_{f\,single}$=	1.55	(Fig 3/5a & 3/5b)
	$A_{f\,twin}$=	1.00	
	$A_{f\,triple}$=	0.87	
Allowable Axle Load	single=	14.2 tonnes	(T 3/6)
	twin=	9.2 tonnes	
	triple=	8.0 tonnes	
Capacity		18 tonnes	(T 3/6)

Axle lift-off may be a factor here:

Axle Factor	Af twin=	0.76	(Fig 3/5b)
Allowable Axle Load	twin=	7.0 tonnes	
Capacity		N/A tonnes	(T 3/6)

BABTIE			CALCULATION SHEET
OFFICE EDINBURGH	PAGE No. B/5	CONT'N PAGE No.	
JOB No. & TITLE 8200/B - NAC WP3	ORIGINATOR [redacted]	DATE	8/03
SECTION MONTGREENAN	CHECKER	DATE	

CURTAILED WIDTH ARCHIE MODEL

FACTORED LIVE ONLY LOAD:

EU SINGLE AXLE WITH IMPACT - PASS
" DOUBLE " " " - PASS
" TRIPLE " " " - PASS

FACTORED DEAD + LIVE LOAD:

EU SINGLE AXLE WITH IMPACT - PASS
" DOUBLE " " " - PASS
" TRIPLE " " " - PASS

HB WIDTH ARCHIE MODEL

FACTORED LIVE ONLY:

25 UNITS - PASS
30 UNITS - FAIL

FACTORED DEAD + LIVE:

30 UNITS - PASS
35 UNITS FAIL

Montgreenan Station Bridge

CURTAILED WIDTH

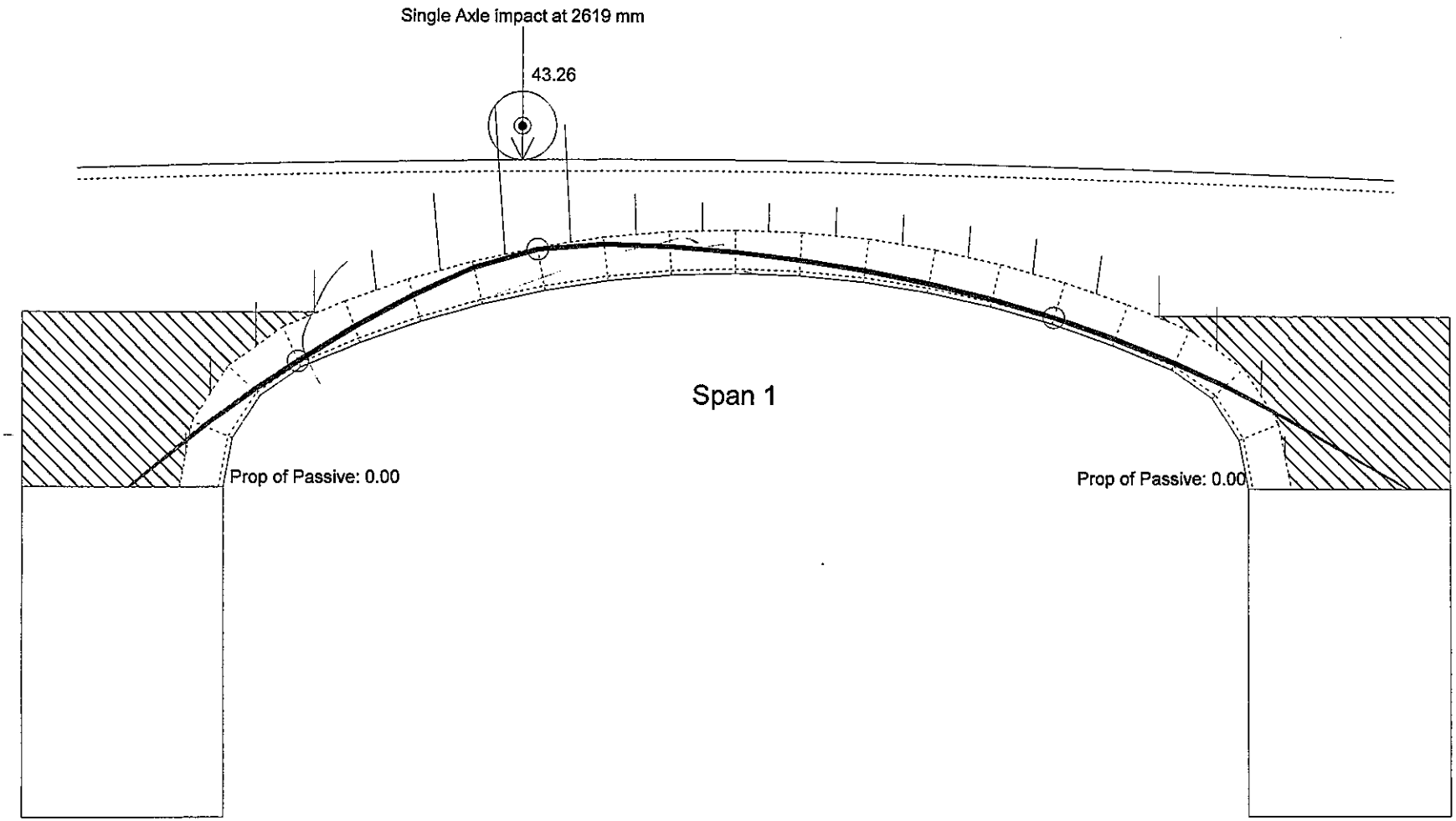

gammaFl dead load: 1.00 Single Axle impact @ 2619 [mm]
gammaFl superimposed: 1.00
gammaFl live load: 1.90
gammaF3 load effect: 1.10
gammaM material: 1.50
File path: G:\ed\n\Structures\Jobs\BUA 0008200 - NAC WP3\Check\B Montgreenan Station Bridge\Montgreenan Skew Curtailed Width.brg

NAME: Montgreenan Station Bridge
LOCATION: North Ayrshire
NUMBER: C20 / 40
Babtie Group Ltd.
DATE: 05 August 2003
Printed on: Thursday, August 21, 2003 15:52:40

9/6

Bridge Name: Montgreenan Station Bridge
Bridge Location: North Ayrshire
Bridge Number: C20 / 40
Number of spans: 1

SAFETY FACTORS

Factor for deadload: 1.00 Factor for superimposed deadload: 1.00 Factor for surfacing: 1.00
Factor for live load: 1.90 Factor for load effect: 1.10 Factor for material strength: 1.50

APPLIED LOAD CASES

1. Single Axle impact Total weight: 112.82 [kN] Position: 2619 [mm]

Applied distribution mode: Archie/Multi
Applied live load pressure: Active pressure

STRUCTURE PROPERTIES

Road shape: Curved (3-point method)
Road points: (-1290, 9910) (4500, 10000) (10290, 9865)
Depth of surfacing: 100 Depth of overlay: 0
Surface unit weight: 23.00 [kN/m^3] Overlay unit weight: 23.00 [kN/m^3]
Lane width: 3304

Fill unit weight: 22.00 [kN/m^3] Fill phi: 30 [degree]

Left abutment Base level:4255 [mm] Height: 7145 [mm] Width: 1772 [mm]
Right abutment Base level:4255 [mm] Height: 7145 [mm] Width: 1772 [mm]

SPAN 1

Shape Three-centred
Span: 9000 [mm] Rise: 1865 [mm] Quarter Rise: 1590 [mm]
Ring Thickness at crown: 381 [mm] Ring Thickness at springing: 381 [mm] Mortar loss:40 [mm]
Masonry Unit Weight: 22.00 [kN/m3] Masonry Strength: 15.50 [MPa]

Segment	Intrados.x	Intrados.z	Extrados.x	Extrados.z	Roadlevel	Fx dead	Fz dead	My dead	Fx live	Fz live	My live	Fx passive	Fx total	Fz total	My total	Thrust in	Thrust out	Extra-Thrust	
0	0	7145	-381	7145	9939	0.00	0.00	0.00	0.00	0.00	0.00	0.00	-338.46	-265.65	-209.04	774	800	-459	***
1	83	7574	-270	7717	9942	0.00	-10.57	2.06	0.00	-0.00	0.00	0.00	-338.46	-255.08	-82.76	210	246	95	
2	321	7941	46	8205	9951	0.00	-18.75	1.49	0.00	-0.00	0.00	0.00	-338.46	-236.33	-13.85	15	54	287	
3	678	8193	523	8540	9962	0.00	-21.88	2.49	0.00	-0.00	0.00	0.00	-338.46	-214.45	-7.60	-0	38	303	
4	1198	8407	1064	8763	9974	0.00	-21.72	4.47	0.00	-0.00	0.00	0.00	-338.46	-192.73	-39.78	85	122	219	
5	1730	8590	1617	8954	9983	2.56	-19.72	4.26	0.03	-0.29	0.13	0.00	-341.05	-172.72	-73.80	178	214	127	
6	2272	8740	2181	9110	9991	1.83	-17.95	4.08	1.94	-20.91	6.57	0.00	-344.81	-133.86	-105.17	269	304	37	
7	2822	8858	2753	9233	9997	1.25	-16.48	3.94	4.11	-57.67	14.31	0.00	-350.17	-59.71	-115.03	307	341	-0	***
8	3378	8942	3332	9321	10000	0.80	-15.32	3.85	2.22	-43.84	8.77	0.00	-353.19	-0.55	-98.05	263	297	44	
9	3938	8993	3915	9373	-288110	0.44	-14.53	3.83	0.17	-5.75	0.49	0.00	-353.80	19.72	-73.25	191	225	116	
10	4500	9010	4500	9391	10000	0.14	-14.11	3.89	-0.00	0.00	0.00	0.00	-353.94	33.84	-52.02	130	164	177	
11	5062	8993	5085	9373	9997	-0.14	-14.08	4.05	0.00	0.00	0.00	0.00	-353.80	47.92	-35.04	81	116	225	
12	5622	8942	5668	9321	9991	-0.44	-14.44	4.33	0.00	0.00	0.00	0.00	-353.37	62.36	-22.29	45	80	261	
13	6178	8858	6247	9233	9983	-0.79	-15.18	4.72	0.00	0.00	0.00	0.00	-352.58	77.54	-13.57	20	55	286	
14	6728	8740	6819	9110	9973	-1.23	-16.28	5.23	0.00	0.00	0.00	0.00	-351.35	93.82	-8.49	6	41	300	
15	7270	8590	7383	8954	9961	-1.79	-17.70	5.87	0.00	0.00	0.00	0.00	-349.56	111.52	-6.51	-0	35	306	
16	7802	8407	7936	8763	9947	-2.51	-19.42	6.62	0.00	0.00	0.00	0.00	-347.05	130.94	-6.92	1	37	304	
17	8322	8193	8477	8540	9931	0.00	-21.38	7.49	0.00	0.00	0.00	0.00	-347.05	152.32	-9.65	7	44	297	
18	8679	7941	8954	8205	9916	0.00	-21.54	7.06	0.00	0.00	0.00	0.00	-347.05	173.86	-42.71	99	134	207	
19	8917	7574	9270	7717	-288014	0.00	-18.50	7.24	0.00	0.00	0.00	0.00	-347.05	192.35	-134.43	421	451	-110	***
20	9000	7145	9381	7145	-288010	0.00	-10.48	6.06	0.00	0.00	0.00	0.00	-347.05	202.83	-277.16	1357	1376	-1035	***

B/7

Montgreenan Station Bridge

CURTAILED WIDTH

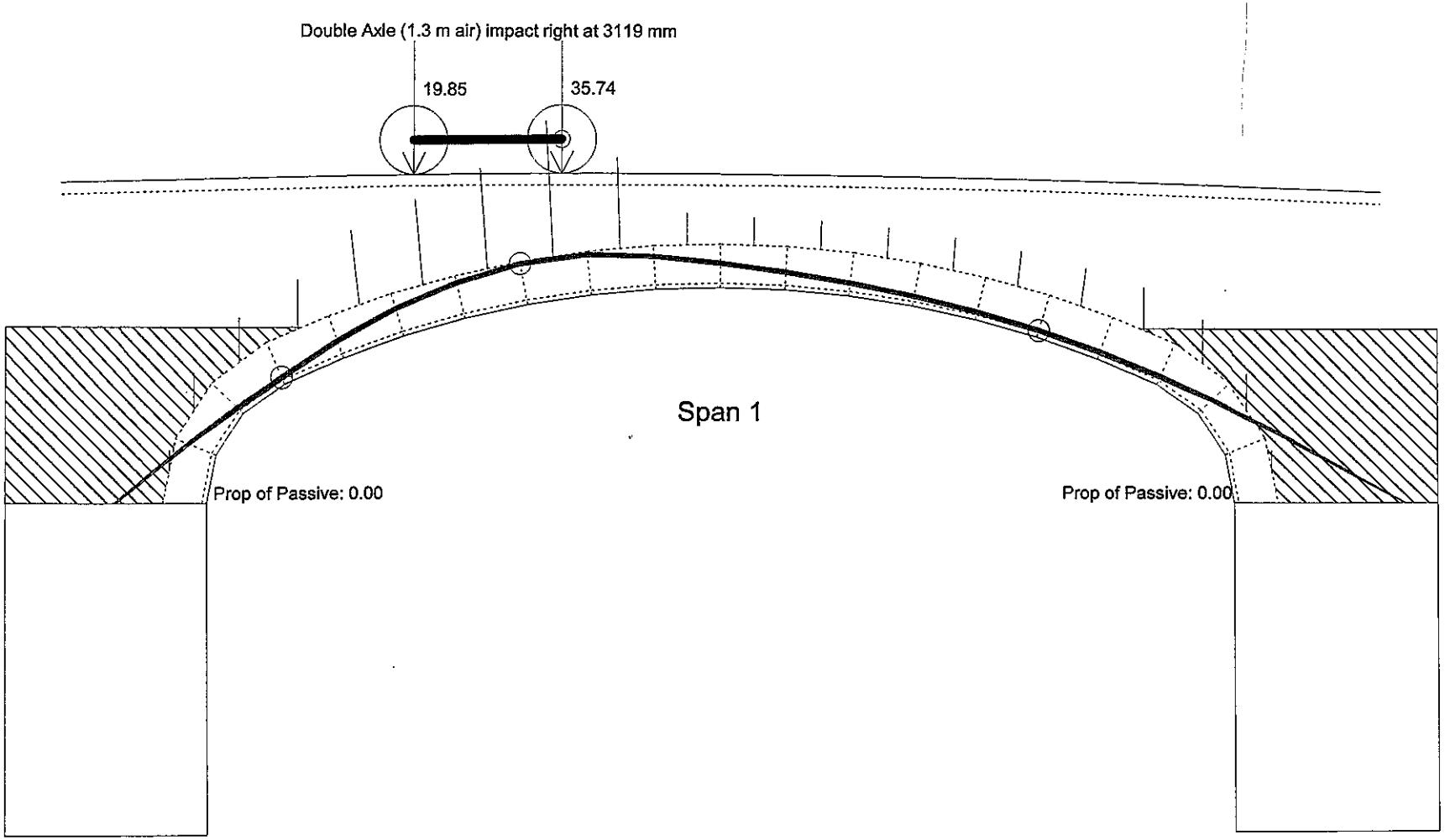

gammaFl dead load: 1.00 Double Axle (1.3 m air) impact right @ 3119 [mm]
gammaFl superimposed: 1.00
gammaFl live load: 1.90
gammaF3 load effect: 1.10
gammaM material: 1.50
File path: G:\ed\n\Structures\Jobs\BUA 0008200 - NAC WP3\Check\B Montgreenan Station Bridge\Montgreenan Skew Curtailed Width.brg

NAME: Montgreenan Station Bridge
LOCATION: North Ayrshire
NUMBER: C20 / 40
Babtie Group Ltd.
DATE: 05 August 2003
Printed on: Thursday, August 21, 2003 15:56:59

8/8

Bridge Name: Montgreenan Staton Bridge Bridge Location: North Ayrshire
Bridge Number: C20 / 40
Number of spans: 1

SAFETY FACTORS
Factor for deadload: 1.00 Factor for superimposed deadload: 1.00 Factor for surfacing: 1.00
Factor for live load: 1.90 Factor for load effect: 1.10 Factor for material strength: 1.50

APPLIED LOAD CASES
1. Double Axle (1.3 m air) impact right Total weight: 176.58 [kN] Position: 3119 [mm]

Applied distribution mode: Archie/Multi
Applied live load pressure: Active pressure

STRUCTURE PROPERTIES
Road shape: Curved (3-point method)
Road points: (-1290, 9910) (4500, 10000) (10290, 9865)
Depth of surfacing: 100 Depth of overlay: 0
Surface unit weight: 23.00 [kN/m^3] Overlay unit weight: 23.00 [kN/m^3]
Lane width: 3304

Fill unit weight: 22.00 [kN/m^3] Fill phi: 30 [degree]

Left abutment Base level:4255 [mm] Height: 7145 [mm] Width: 1772 [mm]
Right abutment Base level:4255 [mm] Height: 7145 [mm] Width: 1772 [mm]

SPAN 1
Shape Three-centred
Span: 9000 [mm] Rise: 1865 [mm] Quarter Rise: 1590 [mm]
Ring Thickness at crown: 381 [mm] Ring Thickness at springing: 381 [mm] Mortar loss:40 [mm]
Masonry Unit Weight: 22.00 [kN/m3] Masonry Strength: 15.50 [MPa]

Segment	Intrados.x	Intrados.z	Extrados.x	Extrados.z	Roadlevel	Fx dead	Fz dead	My dead	Fx live	Fz live	My live	Fx passive	Fx total	Fz total	My total	Thrust in	Thrust out	Extra-Thrust	
0	0	7145	-381	7145	9939	0.00	0.00	0.00	0.00	0.00	0.00	0.00	-368.67	-292.21	-224.68	755	783	-442	***
1	83	7574	-270	7717	9942	0.00	-10.57	2.06	0.00	-0.00	0.00	0.00	-368.67	-281.64	-87.28	199	238	103	
2	321	7941	46	8205	9951	0.00	-18.75	1.49	0.00	-0.00	0.00	0.00	-368.67	-262.90	-13.43	9	52	289	
3	678	8193	523	8540	9962	0.00	-21.88	2.49	0.00	-0.00	0.00	0.00	-368.67	-241.01	-9.14	-0	42	299	
4	1198	8407	1064	8763	9974	0.00	-21.72	4.47	0.00	-3.21	1.05	0.00	-368.67	-216.09	-48.06	94	134	207	
5	1730	8590	1617	8954	9983	2.56	-19.72	4.26	1.98	-17.25	4.23	0.00	-373.21	-179.12	-83.69	185	224	117	
6	2272	8740	2181	9110	9991	1.83	-17.95	4.08	2.30	-24.82	5.34	0.00	-377.33	-136.35	-110.27	257	296	45	
7	2822	8858	2753	9233	9997	1.25	-16.48	3.94	2.41	-33.75	8.95	0.00	-380.98	-86.12	-125.72	303	341	-0	***
8	3378	8942	3332	9321	10000	0.80	-15.32	3.85	2.67	-52.74	13.28	0.00	-384.45	-18.06	-120.38	295	332	9	
9	3938	8993	3915	9373	-288110	0.44	-14.53	3.83	0.95	-31.40	6.14	0.00	-385.84	27.87	-95.02	229	266	75	
10	4500	9010	4500	9391	10000	0.14	-14.11	3.89	0.02	-1.90	0.12	0.00	-385.99	43.89	-67.69	157	194	147	
11	5062	8993	5085	9373	9997	-0.14	-14.08	4.05	0.00	0.00	0.00	0.00	-385.86	57.97	-45.58	98	136	205	
12	5622	8942	5668	9321	9991	-0.44	-14.44	4.33	0.00	0.00	0.00	0.00	-385.42	72.41	-28.81	55	93	248	
13	6178	8858	6247	9233	9983	-0.79	-15.18	4.72	0.00	0.00	0.00	0.00	-384.63	87.59	-17.20	25	63	278	
14	6728	8740	6819	9110	9973	-1.23	-16.28	5.23	0.00	0.00	0.00	0.00	-383.41	103.87	-10.36	7	45	296	
15	7270	8590	7383	8954	9961	-1.79	-17.70	5.87	0.00	0.00	0.00	0.00	-381.61	121.57	-7.75	-0	39	302	
16	7802	8407	7936	8763	9947	-2.51	-19.42	6.62	0.00	0.00	0.00	0.00	-379.10	140.99	-8.68	2	41	300	
17	8322	8193	8477	8540	9931	0.00	-21.38	7.49	0.00	0.00	0.00	0.00	-379.10	162.37	-13.07	12	52	289	
18	8679	7941	8954	8205	9916	0.00	-21.54	7.06	0.00	0.00	0.00	0.00	-379.10	183.90	-50.75	109	147	194	
19	8917	7574	9270	7717	-288014	0.00	-18.50	7.24	0.00	0.00	0.00	0.00	-379.10	202.40	-152.18	446	478	-137	***
20	9000	7145	9381	7145	-288010	0.00	-10.48	6.06	0.00	0.00	0.00	0.00	-379.10	212.88	-308.27	1438	1458	-1117	***

B/4

Montgreenan Station Bridge

CURTAILED WIDTH

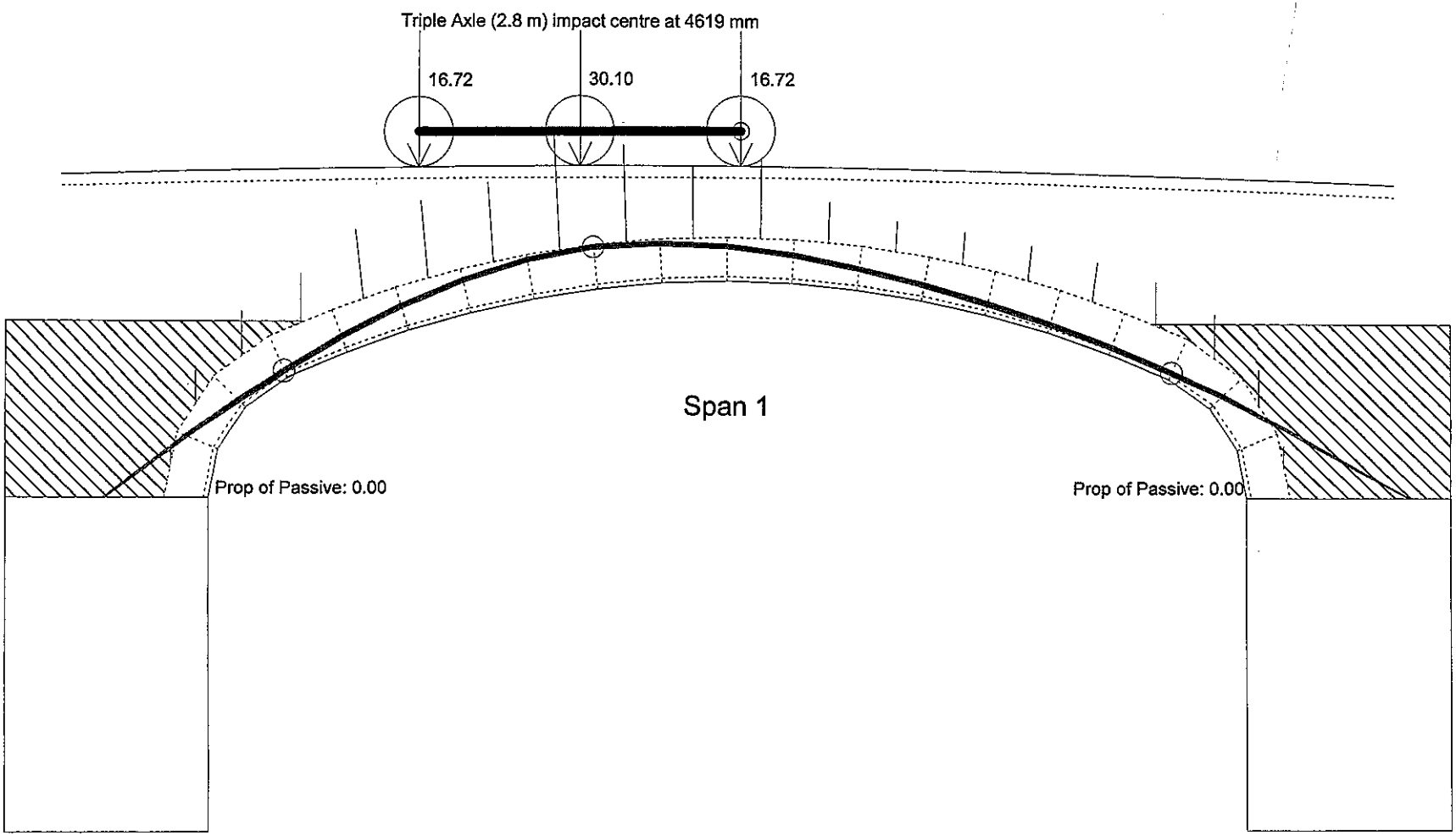

gammaFl dead load: 1.00 Triple Axle (2.8 m) impact centre @ 4619 [mm]
gammaFl superimposed: 1.00
gammaFl live load: 1.90
gammaF3 load effect: 1.10
gammaM material: 1.50
File path: G:\ed\n\Structures\Jobs\BUA 0008200 - NAC WP3\Check\B Montgreenan Station Bridge\Montgreenan Skew Curtailed Width.brg

NAME: Montgreenan Station Bridge
LOCATION: North Ayrshire
NUMBER: C20 / 40
Babtie Group Ltd.
DATE: 05 August 2003
Printed on: Thursday, August 21, 2003 15:57:13

01/03

Bridge Name: Montgreenan Station Bridge
Bridge Location: North Ayrshire
Bridge Number: C20 / 40
Number of spans: 1

SAFETY FACTORS
Factor for deadload: 1.00 Factor for superimposed deadload: 1.00 Factor for surfacing: 1.00
Factor for live load: 1.90 Factor for load effect: 1.10 Factor for material strength: 1.50

APPLIED LOAD CASES
1. Triple Axle (2.8 m) impact centre Total weight: 235.44 [kN] Position: 4619 [mm]

Applied distribution mode: Archie/Multi
Applied live load pressure: Active pressure

STRUCTURE PROPERTIES
Road shape: Curved (3-point method)
Road points: (-1290, 9910) (4500, 10000) (10290, 9865)
Depth of surfacing: 100 Depth of overlay: 0
Surface unit weight: 23.00 [kN/m^3] Overlay unit weight: 23.00 [kN/m^3]
Lane width: 3304

Fill unit weight: 22.00 [kN/m^3] Fill phi: 30 [degree]

Left abutment Base level:4255 [mm] Height: 7145 [mm] Width: 1772 [mm]
Right abutment Base level:4255 [mm] Height: 7145 [mm] Width: 1772 [mm]

SPAN 1
Shape Three-centred
Span: 9000 [mm] Rise: 1865 [mm] Quarter Rise: 1590 [mm]
Ring Thickness at crown: 381 [mm] Ring Thickness at springing: 381 [mm] Mortar loss:40 [mm]
Masonry Unit Weight: 22.00 [kN/m3] Masonry Strength: 15.50 [MPa]

Segment	Intrados.x	Intrados.z	Extrados.x	Extrados.z	Roadlevel	Fx dead	Fz dead	My dead	Fx live	Fz live	My live	Fx passive	Fx total	Fz total	My total	Thrust in	Thrust out	Extra-Thrust	
0	0	7145	-381	7145	9939	0.00	0.00	0.00	0.00	0.00	0.00	0.00	-398.86	-295.45	-256.41	854	882	-541	***
1	83	7574	-270	7717	9942	0.00	-10.57	2.06	0.00	-0.00	0.00	0.00	-398.86	-284.88	-105.87	236	276	65	
2	321	7941	46	8205	9951	0.00	-18.75	1.49	0.00	-0.00	0.00	0.00	-398.86	-266.13	-21.35	23	68	273	
3	678	8193	523	8540	9962	0.00	-21.88	2.49	0.00	-0.00	0.00	0.00	-398.86	-244.25	-10.40	-0	45	296	
4	1198	8407	1064	8763	9974	0.00	-21.72	4.47	0.00	-2.70	0.89	0.00	-398.86	-219.83	-44.60	77	121	220	
5	1730	8590	1617	8954	9983	2.56	-19.72	4.26	1.66	-14.53	3.56	0.00	-403.09	-185.59	-77.53	155	198	143	
6	2272	8740	2181	9110	9991	1.83	-17.95	4.08	1.91	-20.64	4.38	0.00	-406.83	-146.99	-104.49	222	264	77	
7	2822	8858	2753	9233	9997	1.25	-16.48	3.94	1.63	-22.90	6.07	0.00	-409.71	-107.62	-125.53	277	318	23	
8	3378	8942	3332	9321	10000	0.80	-15.32	3.85	2.16	-42.66	11.23	0.00	-412.66	-49.63	-133.38	301	341	-0	***
9	3938	8993	3915	9373	-288110	0.44	-14.53	3.83	1.01	-33.49	7.39	0.00	-414.11	-1.61	-124.42	281	321	20	
10	4500	9010	4500	9391	10000	0.14	-14.11	3.89	0.21	-21.30	6.27	0.00	-414.47	33.80	-108.45	242	282	59	
11	5062	8993	5085	9373	9997	-0.14	-14.08	4.05	-0.25	-24.50	6.53	0.00	-414.08	72.38	-85.22	184	224	117	
12	5622	8942	5668	9321	9991	-0.44	-14.44	4.33	-0.18	-5.93	0.96	0.00	-413.47	92.75	-59.40	120	161	180	
13	6178	8858	6247	9233	9983	-0.79	-15.18	4.72	0.00	0.00	0.00	0.00	-412.68	107.93	-38.80	71	112	229	
14	6728	8740	6819	9110	9973	-1.23	-16.28	5.23	0.00	0.00	0.00	0.00	-411.45	124.21	-24.04	35	77	264	
15	7270	8590	7383	8954	9961	-1.79	-17.70	5.87	0.00	0.00	0.00	0.00	-409.66	141.91	-14.60	13	55	286	
16	7802	8407	7936	8763	9947	-2.51	-19.42	6.62	0.00	0.00	0.00	0.00	-407.15	161.33	-9.82	1	44	297	
17	8322	8193	8477	8540	9931	0.00	-21.38	7.49	0.00	0.00	0.00	0.00	-407.15	182.71	-9.63	-0	43	298	
18	8679	7941	8954	8205	9916	0.00	-21.54	7.06	0.00	0.00	0.00	0.00	-407.15	204.25	-47.08	89	130	211	
19	8917	7574	9270	7717	-288014	0.00	-18.50	7.24	0.00	0.00	0.00	0.00	-407.15	222.74	-154.16	412	447	-106	***
20	9000	7145	9381	7145	-288010	0.00	-10.48	6.06	0.00	0.00	0.00	0.00	-407.15	233.22	-320.95	1365	1387	-1046	***

B/4

Montgreenan Station Bridge

CURTAILED WIDTH

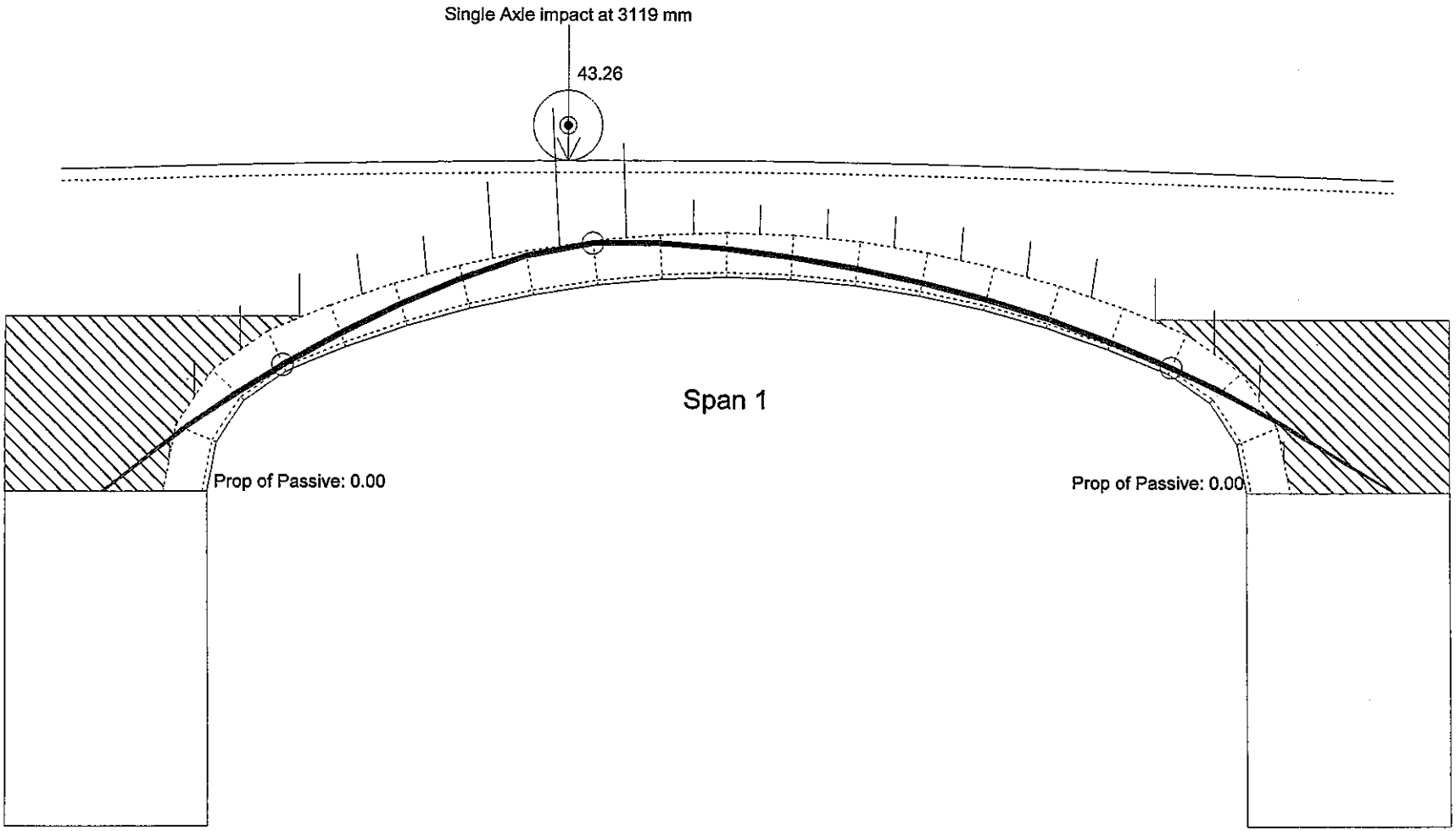

gammaFl dead load: 1.15 Single Axle impact @ 3119 [mm]
gammaFl superimposed: 1.20
gammaFl live load: 1.90
gammaF3 load effect: 1.10
gammaM material: 1.50
File path: G:\ed\n\Structures\Jobs\BUA 0008200 - NAC WP3\Check\B Montgreenan Station Bridge\Montgreenan Skew Curtailed Width.brg

NAME: Montgreenan Station Bridge
LOCATION: North Ayrshire
NUMBER: C20 / 40
Babtie Group Ltd.
DATE: 05 August 2003
Printed on: Thursday, August 21, 2003 16:09:02

3/12

Bridge Name: Montgreenan Station Bridge Bridge Location: North Ayrshire
Bridge Number: C20 / 40
Number of spans: 1

SAFETY FACTORS
Factor for deadload: 1.15 Factor for superimposed deadload: 1.20 Factor for surfacing: 1.75
Factor for live load: 1.90 Factor for load effect: 1.10 Factor for material strength: 1.50

APPLIED LOAD CASES
1. Single Axle impact Total weight: 112.82 [kN] Position: 3119 [mm]

Applied distribution mode: Archie/Multi
Applied live load pressure: Active pressure

STRUCTURE PROPERTIES
Road shape: Curved (3-point method)
Road points: (-1290, 9910) (4500, 10000) (10290, 9865)
Depth of surfacing: 100 Depth of overlay: 0
Surface unit weight: 23.00 [kN/m^3] Overlay unit weight: 23.00 [kN/m^3]
Lane width: 3304

Fill unit weight: 22.00 [kN/m^3] Fill phi: 30 [degree]

Left abutment Base level:4255 [mm] Height: 7145 [mm] Width: 1772 [mm]
Right abutment Base level:4255 [mm] Height: 7145 [mm] Width: 1772 [mm]

SPAN 1
Shape Three-centred
Span: 9000 [mm] Rise: 1865 [mm] Quarter Rise: 1590 [mm]
Ring Thickness at crown: 381 [mm] Ring Thickness at springing: 381 [mm] Mortar loss: 40 [mm]
Masonry Unit Weight: 22.00 [kN/m3] Masonry Strength: 15.50 [MPa]

Segment	Intrados.x	Intrados.z	Extrados.x	Extrados.z	Roadlevel	Fx dead	Fz dead	My dead	Fx live	Fz live	My live	Fx passive	Fx total	Fz total	My total	Thrust in	Thrust out	Extra-Thrust	
0	0	7145	-381	7145	9939	0.00	0.00	0.00	0.00	0.00	0.00	0.00	-396.84	-294.57	-258.52	863	892	-551	***
1	83	7574	-270	7717	9942	0.00	-12.46	2.51	0.00	-0.00	0.00	0.00	-396.84	-282.11	-109.09	246	286	55	
2	321	7941	46	8205	9951	0.00	-22.44	1.83	0.00	-0.00	0.00	0.00	-396.84	-259.67	-24.09	30	74	267	
3	678	8193	523	8540	9962	0.00	-26.50	3.04	0.00	-0.00	0.00	0.00	-396.84	-233.17	-10.12	-0	44	297	
4	1198	8407	1064	8763	9974	0.00	-26.47	5.46	0.00	-0.00	0.00	0.00	-396.84	-206.70	-38.00	64	107	234	
5	1730	8590	1617	8954	9983	3.20	-24.12	5.22	0.00	-0.00	0.00	0.00	-400.03	-182.58	-67.29	133	175	166	
6	2272	8740	2181	9110	9991	2.29	-22.02	5.01	0.04	-0.39	0.18	0.00	-402.36	-160.17	-98.82	210	251	90	
7	2822	8858	2753	9233	9997	1.57	-20.25	4.85	1.79	-25.12	8.19	0.00	-405.73	-114.80	-127.33	283	324	17	
8	3378	8942	3332	9321	10000	1.01	-18.88	4.74	3.17	-62.63	16.02	0.00	-409.91	-33.28	-131.97	301	341	-0	***
9	3938	8993	3915	9373	-288110	0.56	-17.93	4.73	1.15	-38.01	7.44	0.00	-411.61	22.66	-110.42	250	289	52	
10	4500	9010	4500	9391	10000	0.18	-17.43	4.81	0.02	-2.31	0.14	0.00	-411.82	42.40	-84.44	185	225	116	
11	5062	8993	5085	9373	9997	-0.18	-17.40	5.01	0.00	0.00	0.00	0.00	-411.64	59.80	-62.69	131	171	170	
12	5622	8942	5668	9321	9991	-0.56	-17.83	5.34	0.00	0.00	0.00	0.00	-411.08	77.62	-45.31	88	129	212	
13	6178	8858	6247	9233	9983	-1.00	-18.71	5.81	0.00	0.00	0.00	0.00	-410.08	96.33	-32.06	56	97	244	
14	6728	8740	6819	9110	9973	-1.55	-20.02	6.43	0.00	0.00	0.00	0.00	-408.53	116.35	-22.50	32	74	267	
15	7270	8590	7383	8954	9961	-2.25	-21.72	7.20	0.00	0.00	0.00	0.00	-406.28	138.07	-15.97	16	58	283	
16	7802	8407	7936	8763	9947	-3.13	-23.76	8.11	0.00	0.00	0.00	0.00	-403.15	161.83	-11.67	6	48	293	
17	8322	8193	8477	8540	9931	0.00	-26.06	9.13	0.00	0.00	0.00	0.00	-403.15	187.89	-9.56	-0	43	298	
18	8679	7941	8954	8205	9916	0.00	-26.09	8.55	0.00	0.00	0.00	0.00	-403.15	213.97	-43.87	80	122	219	
19	8917	7574	9270	7717	-288014	0.00	-22.14	8.69	0.00	0.00	0.00	0.00	-403.15	236.11	-147.57	381	417	-76	***
20	9000	7145	9381	7145	-288010	0.00	-12.35	7.21	0.00	0.00	0.00	0.00	-403.15	248.47	-312.43	1245	1269	-928	***

B/3

Montgreenan Station Bridge

CURTAILED WIDTH

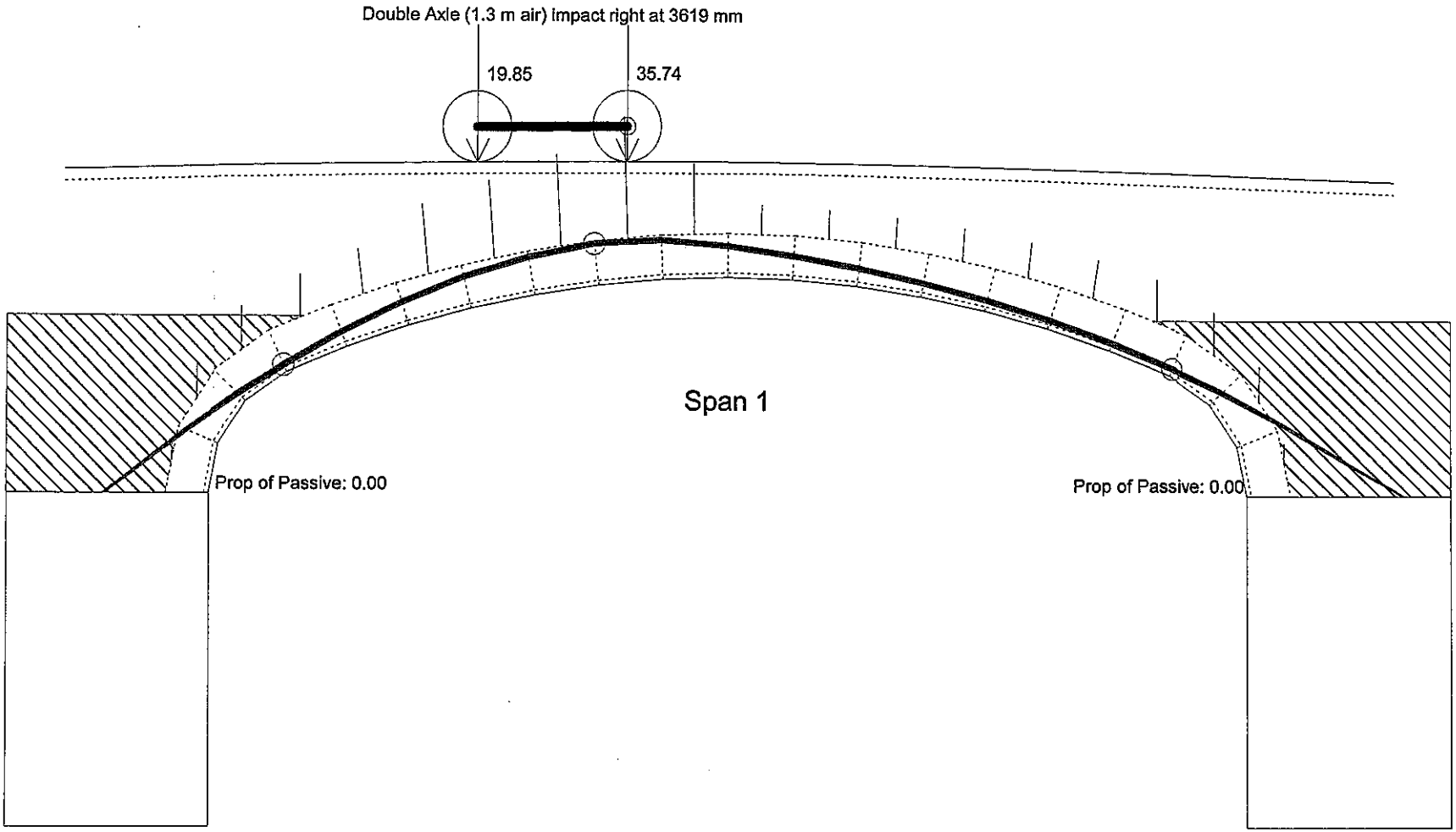

gammaFl dead load: 1.15 Double Axle (1.3 m air) impact right @ 3619 [mm]
gammaFl superimposed: 1.20
gammaFl live load: 1.90
gammaF3 load effect: 1.10
gammaM material: 1.50
File path: G:\ed\n\Structures\Jobs\BUA 0008200 - NAC WP3\Check\B Montgreenan Station Bridge\Montgreenan Skew Curtailed Width.brg

NAME: Montgreenan Station Bridge
LOCATION: North Ayrshire
NUMBER: C20 / 40
Babtie Group Ltd.
DATE: 05 August 2003
Printed on: Thursday, August 21, 2003 16:09:14

Bridge Name: Montgreenan Station Bridge Bridge Location: North Ayrshire
Bridge Number: C20 / 40
Number of spans: 1

SAFETY FACTORS
Factor for deadload: 1.15 Factor for superimposed deadload: 1.20 Factor for surfacing: 1.75
Factor for live load: 1.90 Factor for load effect: 1.10 Factor for material strength: 1.50

APPLIED LOAD CASES
1. Double Axle (1.3 m air) impact right Total weight: 176.58 [kN] Position: 3619 [mm]

Applied distribution mode: Archie/Multi
Applied live load pressure: Active pressure

STRUCTURE PROPERTIES
Road shape: Curved (3-point method)
Road points: (-1290, 9910) (4500, 10000) (10290, 9865)
Depth of surfacing: 100 Depth of overlay: 0
Surface unit weight: 23.00 [kN/m^3] Overlay unit weight: 23.00 [kN/m^3]
Lane width: 3304

Fill unit weight: 22.00 [kN/m^3] Fill phi: 30 [degree]

Left abutment Base level:4255 [mm] Height: 7145 [mm] Width: 1772 [mm]
Right abutment Base level:4255 [mm] Height: 7145 [mm] Width: 1772 [mm]

SPAN 1
Shape Three-centred
Span: 9000 [mm] Rise: 1865 [mm] Quarter Rise: 1590 [mm]
Ring Thickness at crown: 381 [mm] Ring Thickness at springing: 381 [mm] Mortar loss: 40 [mm]
Masonry Unit Weight: 22.00 [kN/m3] Masonry Strength: 15.50 [MPa]

Segment	Intrados.x	Intrados.z	Extrados.x	Extrados.z	Roadlevel	Fx dead	Fz dead	My dead	Fx live	Fz live	My live	Fx passive	Fx total	Fz total	My total	Thrust in	Thrust out	Extra-Thrust	
0	0	7145	-381	7145	9939	0.00	0.00	0.00	0.00	0.00	0.00	0.00	-432.59	-318.52	-282.43	871	902	-561	***
1	83	7574	-270	7717	9942	0.00	-12.46	2.51	0.00	-0.00	0.00	0.00	-432.59	-306.06	-119.18	246	289	52	
2	321	7941	46	8205	9951	0.00	-22.44	1.83	0.00	-0.00	0.00	0.00	-432.59	-283.61	-26.49	28	77	264	
3	678	8193	523	8540	9962	0.00	-26.50	3.04	0.00	-0.00	0.00	0.00	-432.59	-257.12	-12.08	-0	48	293	
4	1198	8407	1064	8763	9974	0.00	-26.47	5.46	0.00	-0.00	0.00	0.00	-432.59	-230.65	-44.77	69	116	225	
5	1730	8590	1617	8954	9983	3.20	-24.12	5.22	0.38	-3.27	1.16	0.00	-436.16	-203.25	-79.63	144	190	151	
6	2272	8740	2181	9110	9991	2.29	-22.02	5.01	1.81	-19.54	5.08	0.00	-440.26	-161.69	-111.16	216	261	80	
7	2822	8858	2753	9233	9997	1.57	-20.25	4.85	1.88	-26.35	5.92	0.00	-443.72	-115.09	-133.08	269	313	28	
8	3378	8942	3332	9321	10000	1.01	-18.88	4.74	1.81	-35.85	10.12	0.00	-446.54	-60.36	-143.83	297	341	-0	***
9	3938	8993	3915	9373	-288110	0.56	-17.93	4.73	1.65	-54.54	14.18	0.00	-448.75	12.11	-133.07	276	319	22	
10	4500	9010	4500	9391	10000	0.18	-17.43	4.81	0.25	-25.04	4.68	0.00	-449.18	54.58	-104.11	210	254	87	
11	5062	8993	5085	9373	9997	-0.18	-17.40	5.01	-0.00	-0.48	0.02	0.00	-449.00	72.46	-75.87	146	190	151	
12	5622	8942	5668	9321	9991	-0.56	-17.83	5.34	0.00	0.00	0.00	0.00	-448.44	90.29	-53.27	95	139	202	
13	6178	8858	6247	9233	9983	-1.00	-18.71	5.81	0.00	0.00	0.00	0.00	-447.44	108.99	-36.11	56	101	240	
14	6728	8740	6819	9110	9973	-1.55	-20.02	6.43	0.00	0.00	0.00	0.00	-445.89	129.01	-23.97	29	74	267	
15	7270	8590	7383	8954	9961	-2.25	-21.72	7.20	0.00	0.00	0.00	0.00	-443.64	150.73	-16.20	12	57	284	
16	7802	8407	7936	8763	9947	-3.13	-23.76	8.11	0.00	0.00	0.00	0.00	-440.51	174.49	-12.00	2	48	293	
17	8322	8193	8477	8540	9931	0.00	-26.06	9.13	0.00	0.00	0.00	0.00	-440.51	200.55	-11.32	-0	47	294	
18	8679	7941	8954	8205	9916	0.00	-26.09	8.55	0.00	0.00	0.00	0.00	-440.51	226.64	-50.67	85	131	210	
19	8917	7574	9270	7717	-288014	0.00	-22.14	8.69	0.00	0.00	0.00	0.00	-440.51	248.78	-165.45	399	438	-97	***
20	9000	7145	9381	7145	-288010	0.00	-12.35	7.21	0.00	0.00	0.00	0.00	-440.51	261.13	-345.80	1312	1337	-996	***

B/15

Montgreenan Station Bridge

CURTAILED WIDTH

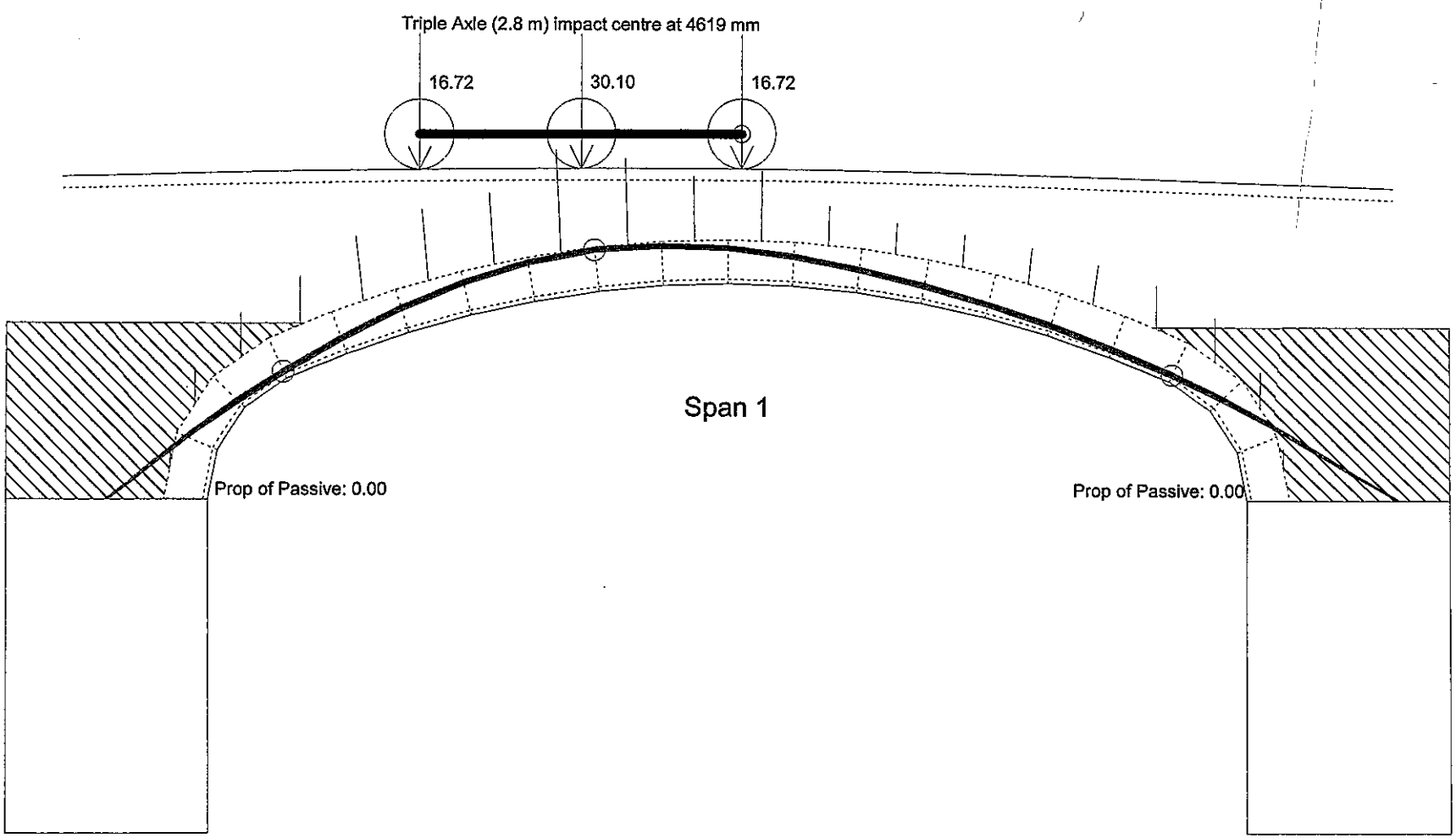

gammaFl dead load: 1.15 Triple Axle (2.8 m) impact centre @ 4619 [mm]
gammaFl superimposed: 1.20
gammaFl live load: 1.90
gammaF3 load effect: 1.10
gammaM material: 1.50
File path: G:\ed\n\Structures\Jobs\BUA 0008200 - NAC WP3\Check\B Montgreenan Station Bridge\Montgreenan Skew Curtailed Width.brg

NAME: Montgreenan Station Bridge
LOCATION: North Ayrshire
NUMBER: C20 / 40
Babtie Group Ltd.
DATE: 05 August 2003
Printed on: Thursday, August 21, 2003 16:09:28

B/26

Bridge Name: Montgreenan Station Bridge
Bridge Location: North Ayrshire
Bridge Number: C20 / 40
Number of spans: 1

SAFETY FACTORS
Factor for deadload: 1.15 Factor for superimposed deadload: 1.20 Factor for surfacing: 1.75
Factor for live load: 1.90 Factor for load effect: 1.10 Factor for material strength: 1.50

APPLIED LOAD CASES
1. Triple Axle (2.8 m) impact centre Total weight: 235.44 [kN] Position: 4619 [mm]

Applied distribution mode: Archie/Multi
Applied live load pressure: Active pressure

STRUCTURE PROPERTIES
Road shape: Curved (3-point method)
Road points: (-1290, 9910) (4500, 10000) (10290, 9865)
Depth of surfacing: 100 Depth of overlay: 0
Surface unit weight: 23.00 [kN/m^3] Overlay unit weight: 23.00 [kN/m^3]
Lane width: 3304

Fill unit weight: 22.00 [kN/m^3] Fill phi: 30 [degree]

Left abutment Base level:4255 [mm] Height: 7145 [mm] Width: 1772 [mm]
Right abutment Base level:4255 [mm] Height: 7145 [mm] Width: 1772 [mm]

SPAN 1
Shape Three-centred
Span: 9000 [mm] Rise: 1865 [mm] Quarter Rise: 1590 [mm]
Ring Thickness at crown: 381 [mm] Ring Thickness at springing: 381 [mm] Mortar loss:40 [mm]
Masonry Unit Weight: 22.00 [kN/m3] Masonry Strength: 15.50 [MPa]

Segment	Intrados.x	Intrados.z	Extrados.x	Extrados.z	Roadlevel	Fx dead	Fz dead	My dead	Fx live	Fz live	My live	Fx passive	Fx total	Fz total	My total	Thrust in	Thrust out	Extra-Thrust	
0	0	7145	-381	7145	9939	0.00	0.00	0.00	0.00	0.00	0.00	0.00	-440.82	-332.85	-281.93	831	863	-522	***
1	83	7574	-270	7717	9942	0.00	-12.46	2.51	0.00	-0.00	0.00	0.00	-440.82	-320.39	-116.27	229	274	67	
2	321	7941	46	8205	9951	0.00	-22.44	1.83	0.00	-0.00	0.00	0.00	-440.82	-297.95	-23.99	21	71	270	
3	678	8193	523	8540	9962	0.00	-26.50	3.04	0.00	-0.00	0.00	0.00	-440.82	-271.45	-12.74	-0	50	291	
4	1198	8407	1064	8763	9974	0.00	-26.47	5.46	0.00	-2.70	0.89	0.00	-440.82	-242.28	-50.61	78	126	215	
5	1730	8590	1617	8954	9983	3.20	-24.12	5.22	1.66	-14.53	3.56	0.00	-445.68	-203.63	-86.32	154	201	140	
6	2272	8740	2181	9110	9991	2.29	-22.02	5.01	1.91	-20.64	4.38	0.00	-449.88	-160.98	-115.32	220	266	75	
7	2822	8858	2753	9233	9997	1.57	-20.25	4.85	1.63	-22.90	6.07	0.00	-453.08	-117.83	-137.78	273	318	23	
8	3378	8942	3332	9321	10000	1.01	-18.88	4.74	2.16	-42.66	11.23	0.00	-456.25	-56.28	-146.55	297	341	-0	***
9	3938	8993	3915	9373	-288110	0.56	-17.93	4.73	1.01	-33.49	7.39	0.00	-457.83	-4.86	-138.08	280	324	17	
10	4500	9010	4500	9391	10000	0.18	-17.43	4.81	0.21	-21.30	6.27	0.00	-458.22	33.88	-122.25	245	289	52	
11	5062	8993	5085	9373	9997	-0.18	-17.40	5.01	-0.25	-24.50	6.53	0.00	-457.79	75.77	-98.79	192	236	105	
12	5622	8942	5668	9321	9991	-0.56	-17.83	5.34	-0.18	-5.93	0.96	0.00	-457.06	99.53	-72.39	133	178	163	
13	6178	8858	6247	9233	9983	-1.00	-18.71	5.81	0.00	0.00	0.00	0.00	-456.06	118.24	-50.81	85	131	210	
14	6728	8740	6819	9110	9973	-1.55	-20.02	6.43	0.00	0.00	0.00	0.00	-454.51	138.26	-34.58	50	96	245	
15	7270	8590	7383	8954	9961	-2.25	-21.72	7.20	0.00	0.00	0.00	0.00	-452.26	159.97	-23.08	25	71	270	
16	7802	8407	7936	8763	9947	-3.13	-23.76	8.11	0.00	0.00	0.00	0.00	-449.13	183.74	-15.52	9	55	286	
17	8322	8193	8477	8540	9931	0.00	-26.06	9.13	0.00	0.00	0.00	0.00	-449.13	209.79	-11.88	-0	48	293	
18	8679	7941	8954	8205	9916	0.00	-26.09	8.55	0.00	0.00	0.00	0.00	-449.13	235.88	-50.04	81	127	214	
19	8917	7574	9270	7717	-288014	0.00	-22.14	8.69	0.00	0.00	0.00	0.00	-449.13	258.02	-165.82	388	427	-86	***
20	9000	7145	9381	7145	-288010	0.00	-12.35	7.21	0.00	0.00	0.00	0.00	-449.13	270.38	-349.20	1278	1305	-964	***

Montgreenan Station Bridge

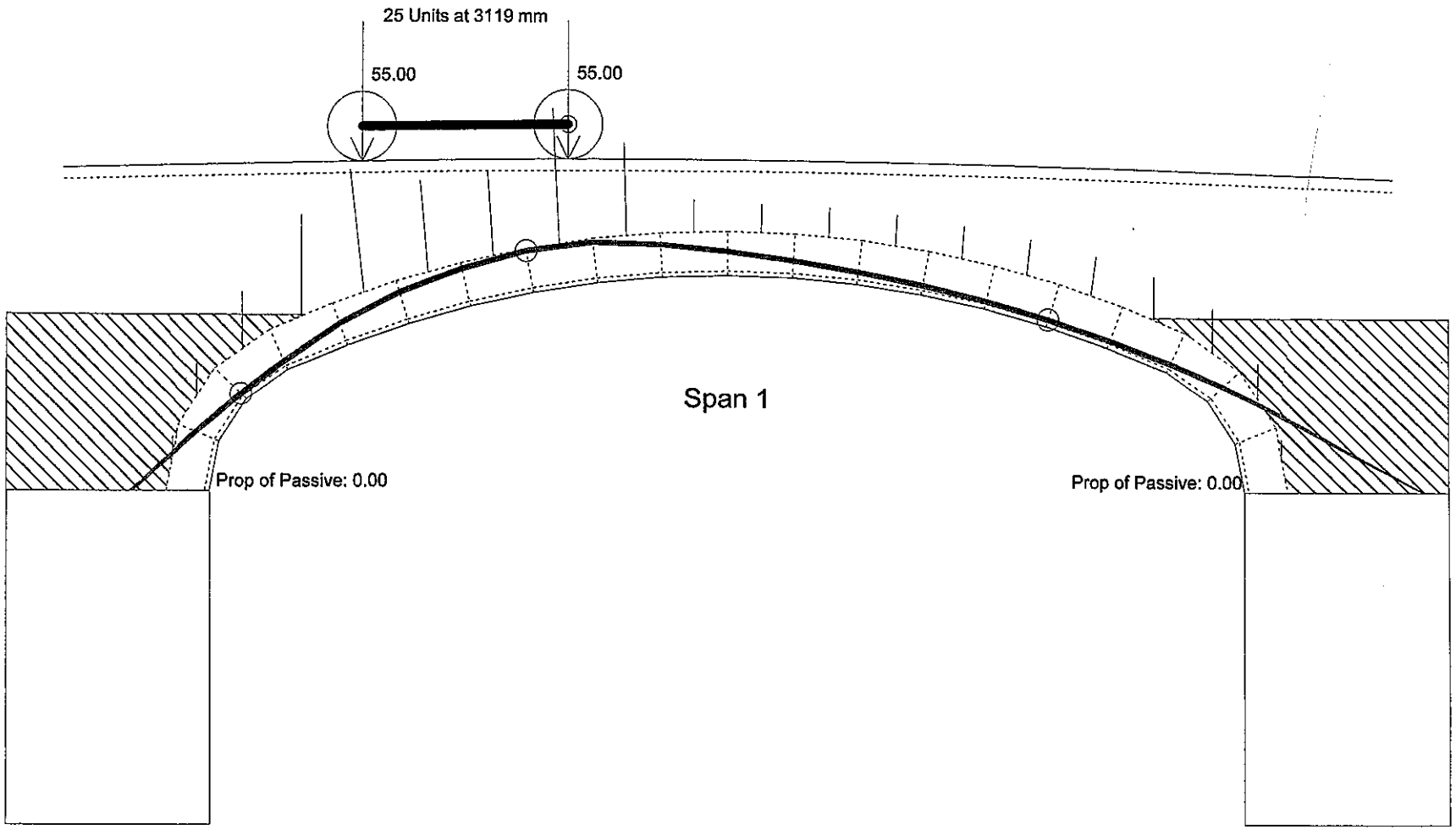

gammaFl dead load: 1.00 25 Units @ 3119 [mm]
gammaFl superimposed: 1.00
gammaFl live load: 2.00
gammaF3 load effect: 1.10
gammaM material: 1.50
File path: G:\ed\n\Structures\Jobs\BUA 0008200 - NAC WP3\Check\B Montgreenan Station Bridge\Montgreenan Skew HB Width.brg

NAME: Montgreenan Station Bridge
LOCATION: North Ayrshire
NUMBER: C20 / 40
Babtie Group Ltd.
DATE: 05 August 2003
Printed on: Friday, August 22, 2003 14:32:21

B/18

Bridge Name: Montgreenan Station Bridge
Bridge Location: North Ayrshire
Bridge Number: C20 / 40
Number of spans: 1

SAFETY FACTORS
Factor for deadload: 1.00 Factor for superimposed deadload: 1.00 Factor for surfacing: 1.00
Factor for live load: 2.00 Factor for load effect: 1.10 Factor for material strength: 1.50

APPLIED LOAD CASES
1. 25 Units Total weight: 490.50 [kN] Position: 3119 [mm]

Applied distribution mode: Archie/Multi
Applied live load pressure: Active pressure

STRUCTURE PROPERTIES
Road shape: Curved (3-point method)
Road points: (-1290, 9910) (4500, 10000) (10290, 9865)
Depth of surfacing: 100 Depth of overlay: 0
Surface unit weight: 23.00 [kN/m^3] Overlay unit weight: 23.00 [kN/m^3]
Lane width: 5109

Fill unit weight: 22.00 [kN/m^3] Fill phi: 30 [degree]

Left abutment Base level:4255 [mm] Height: 7145 [mm] Width: 1772 [mm]
Right abutment Base level:4255 [mm] Height: 7145 [mm] Width: 1772 [mm]

SPAN 1
Shape Three-centred
Span: 9000 [mm] Rise: 1865 [mm] Quarter Rise: 1590 [mm]
Ring Thickness at crown: 381 [mm] Ring Thickness at springing: 381 [mm] Mortar loss:40 [mm]
Masonry Unit Weight: 22.00 [kN/m3] Masonry Strength: 15.50 [MPa]

Segment	Intrados.x	Intrados.z	Extrados.x	Extrados.z	Roadlevel	Fx dead	Fz dead	My dead	Fx live	Fz live	My live	Fx passive	Fx total	Fz total	My total	Thrust in	Thrust out	Extra-Thrust	
0	0	7145	-381	7145	9939	0.00	0.00	0.00	0.00	0.00	0.00	0.00	-379.17	-336.94	-216.39	626	659	-318	***
1	83	7574	-270	7717	9942	0.00	-10.57	2.06	0.00	-0.00	0.00	0.00	-379.17	-326.37	-78.17	154	197	144	
2	321	7941	46	8205	9951	0.00	-18.75	1.49	0.00	-0.06	0.02	0.00	-379.17	-307.56	-11.34	-0	47	294	
3	678	8193	523	8540	9962	0.00	-21.88	2.49	0.00	-6.24	1.17	0.00	-379.17	-279.44	-19.71	21	65	276	
4	1198	8407	1064	8763	9974	0.00	-21.72	4.47	0.00	-27.72	6.30	0.00	-379.17	-230.00	-68.87	137	179	162	
5	1730	8590	1617	8954	9983	2.56	-19.72	4.26	4.64	-40.48	8.19	0.00	-386.37	-169.80	-101.07	221	261	80	
6	2272	8740	2181	9110	9991	1.83	-17.95	4.08	2.49	-26.88	4.74	0.00	-390.68	-124.97	-118.84	271	310	31	
7	2822	8858	2753	9233	9997	1.25	-16.48	3.94	1.80	-25.19	7.10	0.00	-393.73	-83.30	-129.37	302	341	-0	***
8	3378	8942	3332	9321	10000	0.80	-15.32	3.85	2.60	-51.49	13.17	0.00	-397.13	-16.48	-121.96	289	327	14	
9	3938	8993	3915	9373	-288110	0.44	-14.53	3.83	0.94	-31.25	6.11	0.00	-398.51	29.30	-95.12	221	259	82	
10	4500	9010	4500	9391	10000	0.14	-14.11	3.89	0.02	-1.90	0.12	0.00	-398.67	45.31	-66.78	148	187	154	
11	5062	8993	5085	9373	9997	-0.14	-14.08	4.05	0.00	0.00	0.00	0.00	-398.53	59.39	-44.09	90	129	212	
12	5622	8942	5668	9321	9991	-0.44	-14.44	4.33	0.00	0.00	0.00	0.00	-398.10	73.83	-27.16	48	87	254	
13	6178	8858	6247	9233	9983	-0.79	-15.18	4.72	0.00	0.00	0.00	0.00	-397.31	89.01	-15.83	19	59	282	
14	6728	8740	6819	9110	9973	-1.23	-16.28	5.23	0.00	0.00	0.00	0.00	-396.08	105.29	-9.70	4	43	298	
15	7270	8590	7383	8954	9961	-1.79	-17.70	5.87	0.00	0.00	0.00	0.00	-394.29	122.99	-8.24	-0	40	301	
16	7802	8407	7936	8763	9947	-2.51	-19.42	6.62	0.00	0.00	0.00	0.00	-391.78	142.41	-10.74	6	46	295	
17	8322	8193	8477	8540	9931	0.00	-21.38	7.49	0.00	0.00	0.00	0.00	-391.78	163.79	-17.12	20	61	280	
18	8679	7941	8954	8205	9916	0.00	-21.54	7.06	0.00	0.00	0.00	0.00	-391.78	185.32	-57.57	122	162	179	
19	8917	7574	9270	7717	-288014	0.00	-18.50	7.24	0.00	0.00	0.00	0.00	-391.78	203.82	-163.46	471	503	-162	***
20	9000	7145	9381	7145	-288010	0.00	-10.48	6.06	0.00	0.00	0.00	0.00	-391.78	214.30	-325.06	1506	1527	-1186	***

Montgreenan Station Bridge

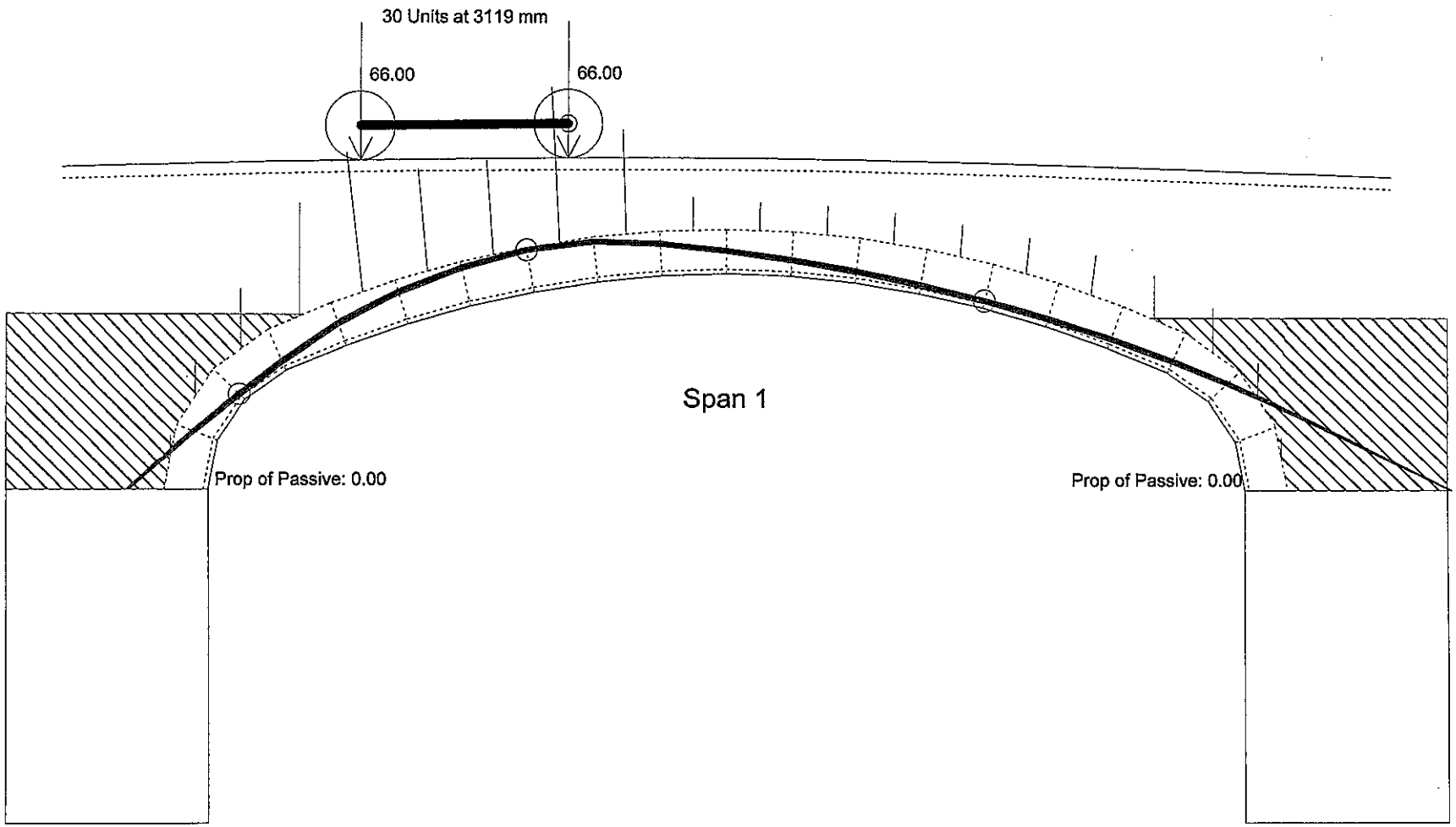

gammaFl dead load: 1.00 30 Units @ 3119 [mm]
gammaFl superimposed: 1.00
gammaFl live load: 2.00
gammaF3 load effect: 1.10
gammaM material: 1.50
File path: G:\ed\n\Structures\Jobs\BUA 0008200 - NAC WP3\Check\B Montgreenan Station Bridge\Montgreenan Skew HB Width.brg

NAME: Montgreenan Station Bridge
LOCATION: North Ayrshire
NUMBER: C20 / 40
Babtie Group Ltd.
DATE: 05 August 2003
Printed on: Friday, August 22, 2003 14:32:33

B/20

Bridge Name: Montgreenan Station Bridge
Bridge Location: North Ayrshire
Bridge Number: C20 / 40
Number of spans: 1

SAFETY FACTORS
Factor for deadload: 1.00 Factor for superimposed deadload: 1.00 Factor for surfacing: 1.00
Factor for live load: 2.00 Factor for load effect: 1.10 Factor for material strength: 1.50

APPLIED LOAD CASES
1. 30 Units Total weight: 588.60 [kN] Position: 3119 [mm]

Applied distribution mode: Archie/Multi
Applied live load pressure: Active pressure

STRUCTURE PROPERTIES
Road shape: Curved (3-point method)
Road points: (-1290, 9910) (4500, 10000) (10290, 9865)
Depth of surfacing: 100 Depth of overlay: 0
Surface unit weight: 23.00 [kN/m^3] Overlay unit weight: 23.00 [kN/m^3]
Lane width: 5109

Fill unit weight: 22.00 [kN/m^3] Fill phi: 30 [degree]

Left abutment Base level:4255 [mm] Height: 7145 [mm] Width: 1772 [mm]
Right abutment Base level:4255 [mm] Height: 7145 [mm] Width: 1772 [mm]

SPAN 1
Shape Three-centred
Span: 9000 [mm] Rise: 1865 [mm] Quarter Rise: 1590 [mm]
Ring Thickness at crown: 381 [mm] Ring Thickness at springing: 381 [mm] Mortar loss: 40 [mm]
Masonry Unit Weight: 22.00 [kN/m3] Masonry Strength: 15.50 [MPa]

Segment	Intrados.x	Intrados.z	Extrados.x	Extrados.z	Roadlevel	Fx dead	Fz dead	My dead	Fx live	Fz live	My live	Fx passive	Fx total	Fz total	My total	Thrust in	Thrust out	Extra-Thrust	
0	0	7145	-381	7145	9939	0.00	0.00	0.00	0.00	0.00	0.00	0.00	-426.67	-371.98	-246.77	645	681	-340	***
1	83	7574	-270	7717	9942	0.00	-10.57	2.06	0.00	-0.00	0.00	0.00	-426.67	-361.41	-90.48	159	207	134	
2	321	7941	46	8205	9951	0.00	-18.75	1.49	0.00	-0.07	0.02	0.00	-426.67	-342.59	-14.22	-0	52	289	
3	678	8193	523	8540	9962	0.00	-21.88	2.49	0.00	-7.49	1.41	0.00	-426.67	-313.21	-22.96	19	69	272	
4	1198	8407	1064	8763	9974	0.00	-21.72	4.47	0.00	-33.26	7.56	0.00	-426.67	-258.23	-77.89	135	183	158	
5	1730	8590	1617	8954	9983	2.56	-19.72	4.26	5.57	-48.58	9.83	0.00	-434.80	-189.94	-113.58	218	264	77	
6	2272	8740	2181	9110	9991	1.83	-17.95	4.08	2.99	-32.26	5.69	0.00	-439.62	-139.73	-132.94	267	311	30	
7	2822	8858	2753	9233	9997	1.25	-16.48	3.94	2.16	-30.23	8.52	0.00	-443.02	-93.02	-144.44	297	341	-0	***
8	3378	8942	3332	9321	10000	0.80	-15.32	3.85	3.12	-61.79	15.80	0.00	-446.94	-15.90	-135.12	282	325	16	
9	3938	8993	3915	9373	-288110	0.44	-14.53	3.83	1.13	-37.50	7.34	0.00	-448.51	36.12	-103.12	210	253	88	
10	4500	9010	4500	9391	10000	0.14	-14.11	3.89	0.02	-2.27	0.14	0.00	-448.68	52.51	-69.88	134	177	164	
11	5062	8993	5085	9373	9997	-0.14	-14.08	4.05	0.00	0.00	0.00	0.00	-448.54	66.59	-43.97	75	119	222	
12	5622	8942	5668	9321	9991	-0.44	-14.44	4.33	0.00	0.00	0.00	0.00	-448.10	81.04	-25.54	34	78	263	
13	6178	8858	6247	9233	9983	-0.79	-15.18	4.72	0.00	0.00	0.00	0.00	-447.31	96.22	-14.41	9	54	287	
14	6728	8740	6819	9110	9973	-1.23	-16.28	5.23	0.00	0.00	0.00	0.00	-446.09	112.49	-10.21	-0	44	297	
15	7270	8590	7383	8954	9961	-1.79	-17.70	5.87	0.00	0.00	0.00	0.00	-444.30	130.20	-12.38	4	49	292	
16	7802	8407	7936	8763	9947	-2.51	-19.42	6.62	0.00	0.00	0.00	0.00	-441.78	149.62	-20.22	21	66	275	
17	8322	8193	8477	8540	9931	0.00	-21.38	7.49	0.00	0.00	0.00	0.00	-441.78	170.99	-33.61	48	94	247	
18	8679	7941	8954	8205	9916	0.00	-21.54	7.06	0.00	0.00	0.00	0.00	-441.78	192.53	-84.41	168	211	130	
19	8917	7574	9270	7717	-288014	0.00	-18.50	7.24	0.00	0.00	0.00	0.00	-441.78	211.03	-207.51	558	592	-251	***
20	9000	7145	9381	7145	-288010	0.00	-10.48	6.06	0.00	0.00	0.00	0.00	-441.78	221.51	-390.70	1753	1775	-1434	***

3/21

Montgreenan Station Bridge

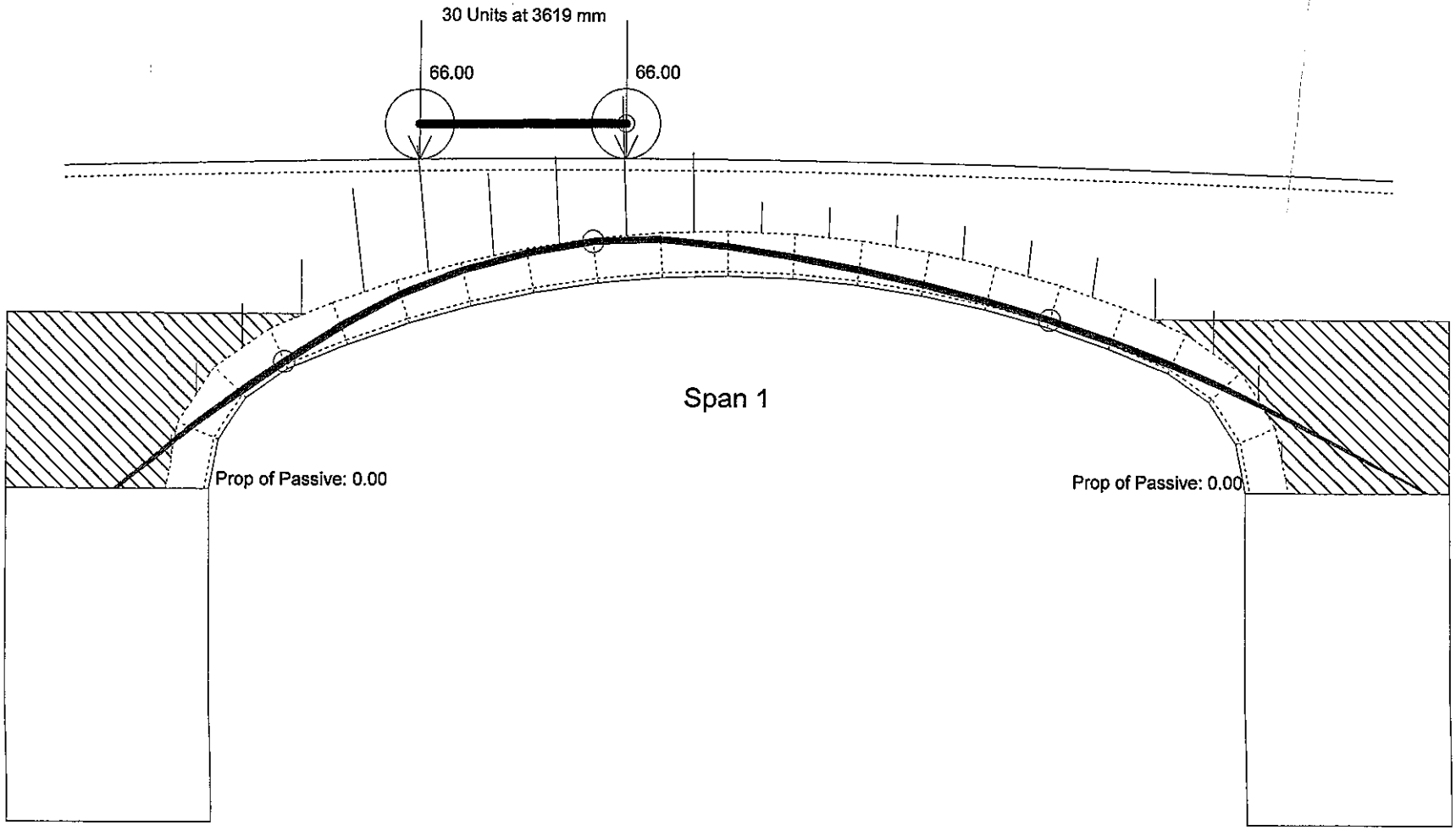

gammaFl dead load: 1.15 30 Units @ 3619 [mm]
gammaFl superimposed: 1.20
gammaFl live load: 2.00
gammaF3 load effect: 1.10
gammaM material: 1.50
File path: G:\ed\n\Structures\Jobs\BUA 0008200 - NAC WP3\Check\B Montgreenan Station Bridge\Montgreenan Skew HB Width.brg

NAME: Montgreenan Station Bridge
LOCATION: North Ayrshire
NUMBER: C20 / 40
Babtie Group Ltd.
DATE: 05 August 2003
Printed on: Friday, August 22, 2003 14:31:20

B/22

Bridge Name: Montgreenan Station Bridge
Bridge Location: North Ayrshire
Bridge Number: C20 / 40
Number of spans: 1

SAFETY FACTORS
Factor for deadload: 1.15 Factor for superimposed deadload: 1.20 Factor for surfacing: 1.75
Factor for live load: 2.00 Factor for load effect: 1.10 Factor for material strength: 1.50

APPLIED LOAD CASES
1. 30 Units Total weight: 588.60 [kN] Position: 3619 [mm]

Applied distribution mode: Archie/Mulı
Applied live load pressure: Active pressure

STRUCTURE PROPERTIES
Road shape: Curved (3-point method)
Road points: (-1290, 9910) (4500, 10000) (10290, 9865)
Depth of surfacing: 100 Depth of overlay: 0
Surface unit weight: 23.00 [kN/m^3] Overlay unit weight: 23.00 [kN/m^3]
Lane width: 5109

Fill unit weight: 22.00 [kN/m^3] Fill phi: 30 [degree]

Left abutment Base level:4255 [mm] Height: 7145 [mm] Width: 1772 [mm]
Right abutment Base level:4255 [mm] Height: 7145 [mm] Width: 1772 [mm]

SPAN 1
Shape Three-centred
Span: 9000 [mm] Rise: 1865 [mm] Quarter Rise: 1590 [mm]
Ring Thickness at crown: 381 [mm] Ring Thickness at springing: 381 [mm] Mortar loss:40 [mm]
Masonry Unit Weight: 22.00 [kN/m3] Masonry Strength: 15.50 [MPa]

Segment	Intrados.x	Intrados.z	Extrados.x	Extrados.z	Roadlevel	Fx dead	Fz dead	My dead	Fx live	Fz live	My live	Fx passive	Fx total	Fz total	My total	Thrust in	Thrust out	Extra-Thrust	
0	0	7145	-381	7145	9939	0.00	0.00	0.00	0.00	0.00	0.00	0.00	-497.64	-392.79	-305.52	759	797	-456	***
1	83	7574	-270	7717	9942	0.00	-12.46	2.51	0.00	-0.00	0.00	0.00	-497.64	-380.32	-119.78	196	248	93	
2	321	7941	46	8205	9951	0.00	-22.44	1.83	0.00	-0.00	0.00	0.00	-497.64	-357.88	-20.66	5	63	278	
3	678	8193	523	8540	9962	0.00	-26.50	3.04	0.00	-0.00	0.00	0.00	-497.64	-331.38	-16.79	-0	57	284	
4	1198	8407	1064	8763	9974	0.00	-26.47	5.46	0.00	-6.89	2.27	0.00	-497.64	-298.02	-72.91	100	155	186	
5	1730	8590	1617	8954	9983	3.20	-24.12	5.22	4.25	-37.08	9.09	0.00	-505.09	-236.81	-120.95	192	246	95	
6	2272	8740	2181	9110	9991	2.29	-22.02	5.01	4.87	-52.65	11.16	0.00	-512.25	-162.14	-147.93	250	302	39	
7	2822	8858	2753	9233	9997	1.57	-20.25	4.85	2.04	-28.68	5.05	0.00	-515.87	-113.21	-159.42	276	328	13	
8	3378	8942	3332	9321	10000	1.01	-18.88	4.74	1.66	-32.79	10.28	0.00	-518.54	-61.55	-164.90	291	341	-0	***
9	3938	8993	3915	9373	-288110	0.56	-17.93	4.73	1.96	-64.89	16.93	0.00	-521.06	21.28	-148.05	260	310	31	
10	4500	9010	4500	9391	10000	0.18	-17.43	4.81	0.30	-29.90	5.58	0.00	-521.54	68.61	-110.85	187	238	103	
11	5062	8993	5085	9373	9997	-0.18	-17.40	5.01	-0.01	-0.58	0.03	0.00	-521.36	86.59	-75.86	119	170	171	
12	5622	8942	5668	9321	9991	-0.56	-17.83	5.34	0.00	0.00	0.00	0.00	-520.80	104.41	-49.00	67	118	223	
13	6178	8858	6247	9233	9983	-1.00	-18.71	5.81	0.00	0.00	0.00	0.00	-519.80	123.12	-30.09	31	82	259	
14	6728	8740	6819	9110	9973	-1.55	-20.02	6.43	0.00	0.00	0.00	0.00	-518.25	143.14	-18.69	9	61	280	
15	7270	8590	7383	8954	9961	-2.25	-21.72	7.20	0.00	0.00	0.00	0.00	-516.00	164.85	-14.17	-0	52	289	
16	7802	8407	7936	8763	9947	-3.13	-23.76	8.11	0.00	0.00	0.00	0.00	-512.87	188.62	-15.71	2	55	286	
17	8322	8193	8477	8540	9931	0.00	-26.06	9.13	0.00	0.00	0.00	0.00	-512.87	214.68	-23.25	15	69	272	
18	8679	7941	8954	8205	9916	0.00	-26.09	8.55	0.00	0.00	0.00	0.00	-512.87	240.76	-76.20	118	170	171	
19	8917	7574	9270	7717	-288014	0.00	-22.14	8.69	0.00	0.00	0.00	0.00	-512.87	262.90	-214.98	472	515	-174	***
20	9000	7145	9381	7145	-288010	0.00	-12.35	7.21	0.00	0.00	0.00	0.00	-512.87	275.26	-426.25	1535	1562	-1221	***

B/25

Montgreenan Station Bridge

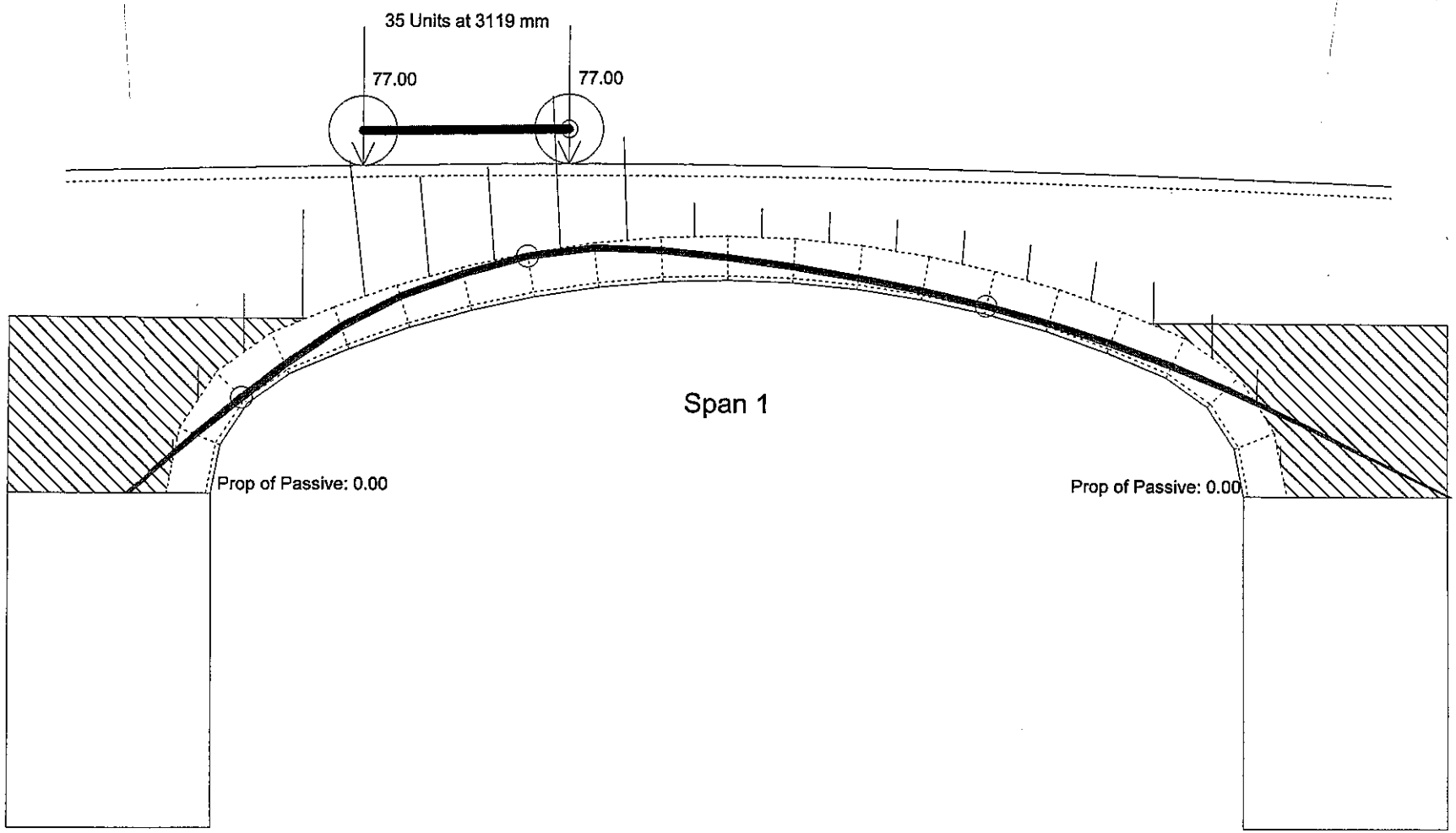

gammaFl dead load: 1.15 35 Units @ 3119 [mm]
gammaFl superimposed: 1.20
gammaFl live load: 2.00
gammaF3 load effect: 1.10
gammaM material: 1.50
File path: G:\ed\n\Structures\Jobs\BUA 0008200 - NAC WP3\Check\B Montgreenan Station Bridge\Montgreenan Skew HB Width.brg

NAME: Montgreenan Station Bridge
LOCATION: North Ayrshire
NUMBER: C20 / 40
Babtie Group Ltd.
DATE: 05 August 2003
Printed on: Friday, August 22, 2003 14:31:33

B/24

Bridge Name: Montgreenan Station Bridge
Bridge Location: North Ayrshire
Bridge Number: C20 / 40
Number of spans: 1

SAFETY FACTORS
Factor for deadload: 1.15 Factor for superimposed deadload: 1.20 Factor for surfacing: 1.75
Factor for live load: 2.00 Factor for load effect: 1.10 Factor for material strength: 1.50

APPLIED LOAD CASES
1. 35 Units Total weight: 686.70 [kN] Position: 3119 [mm]

Applied distribution mode: Archie/Multi
Applied live load pressure: Active pressure

STRUCTURE PROPERTIES
Road shape: Curved (3-point method)
Road points: (-1290, 9910) (4500, 10000) (10290, 9865)
Depth of surfacing: 100 Depth of overlay: 0
Surface unit weight: 23.00 [kN/m^3] Overlay unit weight: 23.00 [kN/m^3]
Lane width: 5109

Fill unit weight: 22.00 [kN/m^3] Fill phi: 30 [degree]

Left abutment Base level:4255 [mm] Height: 7145 [mm] Width: 1772 [mm]
Right abutment Base level:4255 [mm] Height: 7145 [mm] Width: 1772 [mm]

SPAN 1
Shape Three-centred
Span: 9000 [mm] Rise: 1865 [mm] Quarter Rise: 1590 [mm]
Ring Thickness at crown: 381 [mm] Ring Thickness at springing: 381 [mm] Mortar loss:40 [mm]
Masonry Unit Weight: 22.00 [kN/m3] Masonry Strength: 15.50 [MPa]

Segment	Intrados.x	Intrados.z	Extrados.x	Extrados.z	Roadlevel	Fx dead	Fz dead	My dead	Fx live	Fz live	My live	Fx passive	Fx total	Fz total	My total	Thrust in	Thrust out	Extra-Thrust	
0	0	7145	-381	7145	9939	0.00	0.00	0.00	0.00	0.00	0.00	0.00	-513.33	-442.96	-301.51	659	702	-361	***
1	83	7574	-270	7717	9942	0.00	-12.46	2.51	0.00	-0.00	0.00	0.00	-513.33	-430.49	-113.13	163	220	121	
2	321	7941	46	8205	9951	0.00	-22.44	1.83	0.00	-0.09	0.02	0.00	-513.33	-407.97	-20.38	-0	63	278	
3	678	8193	523	8540	9962	0.00	-26.50	3.04	0.00	-8.74	1.64	0.00	-513.33	-372.72	-29.38	17	77	264	
4	1198	8407	1064	8763	9974	0.00	-26.47	5.46	0.00	-38.81	8.82	0.00	-513.33	-307.45	-93.59	130	187	154	
5	1730	8590	1617	8954	9983	3.20	-24.12	5.22	6.49	-56.67	11.46	0.00	-523.02	-226.66	-135.30	211	266	75	
6	2272	8740	2181	9110	9991	2.29	-22.02	5.01	3.48	-37.63	6.64	0.00	-528.79	-167.01	-157.90	259	312	29	
7	2822	8858	2753	9233	9997	1.57	-20.25	4.85	2.51	-35.27	9.94	0.00	-532.88	-111.48	-171.31	288	341	-0	***
8	3378	8942	3332	9321	10000	1.01	-18.88	4.74	3.64	-72.09	18.44	0.00	-537.54	-20.51	-160.42	273	325	16	
9	3938	8993	3915	9373	-288110	0.56	-17.93	4.73	1.32	-43.75	8.56	0.00	-539.42	41.17	-123.08	204	256	85	
10	4500	9010	4500	9391	10000	0.18	-17.43	4.81	0.03	-2.65	0.17	0.00	-539.63	61.26	-84.30	130	182	159	
11	5062	8993	5085	9373	9997	-0.18	-17.40	5.01	0.00	0.00	0.00	0.00	-539.45	78.66	-54.07	73	126	215	
12	5622	8942	5668	9321	9991	-0.56	-17.83	5.34	0.00	0.00	0.00	0.00	-538.89	96.48	-32.59	33	86	255	
13	6178	8858	6247	9233	9983	-1.00	-18.71	5.81	0.00	0.00	0.00	0.00	-537.89	115.19	-19.64	9	62	279	
14	6728	8740	6819	9110	9973	-1.55	-20.02	6.43	0.00	0.00	0.00	0.00	-536.34	135.21	-14.75	-0	53	288	
15	7270	8590	7383	8954	9961	-2.25	-21.72	7.20	0.00	0.00	0.00	0.00	-534.10	156.93	-17.29	4	58	283	
16	7802	8407	7936	8763	9947	-3.13	-23.76	8.11	0.00	0.00	0.00	0.00	-530.96	180.69	-26.38	20	74	267	
17	8322	8193	8477	8540	9931	0.00	-26.06	9.13	0.00	0.00	0.00	0.00	-530.96	206.75	-41.96	46	101	240	
18	8679	7941	8954	8205	9916	0.00	-26.09	8.55	0.00	0.00	0.00	0.00	-530.96	232.83	-102.55	165	217	124	
19	8917	7574	9270	7717	-288014	0.00	-22.14	8.69	0.00	0.00	0.00	0.00	-530.96	254.97	-250.15	554	596	-255	***
20	9000	7145	9381	7145	-288010	0.00	-12.35	7.21	0.00	0.00	0.00	0.00	-530.96	267.33	-470.14	1746	1772	-1431	***

B/25

APPENDIX D

CBAS 3 and CBAS 4 Forms

Form "BA" Bridges

FORM CBAS3	NORTH AYRSHIRE COUNCIL	
Sheet . 1 . . of . . 1 .	ROADS SERVICES	
	YEAR COMPLETED	2003

STRUCTURE NAME MONTGREENAN STATION BRIDGE

STRUCTURE REF. No. C20/40

GRID REFERENCE 2 3 4 0 9 0 6 4 3 4 0 5

1. ASSESSED CAPACITY		2A. INTERIM MEASURES (DMRB)		3. STRUCTURAL SUB-ELEMENT	4. FACTORS AFFECTING STRENGTH
a. Standard Loading	N	a. Required	Y	ARCRNG	OTHERR
b. Assessment Live Loading	18.0	b. Impose Weight Restriction (Tonnes)	18.0		
c. FE Loading	1	c. Impose Lane Width Restrictions	N		
		d. Impose Single Lane Working	N		
		e. Prop Structure	N		
		f. Close Structure	N		
		g. Monitor Structure	N		

5. EXISTING RESTRICTIONS		
a. Restricted	N	
b. Vehicle Weight (Tonnes)		
c. Axle Weight (Tonnes)		
d. Lane Width		
e. Single Lane Working		
f. Currently Being Monitored		

7. MASONRY STRUCTURES		
a. MEXE Used	Y	
b. Modifying Factor	0.4	
c. MEXE Capacity (Tonnes)	40	

6. ASSESSMENT PARAMETERS	CAUTIOUS VALUE ASSUMED	CONFIRMED ON SITE	TAKEN FROM RECORD INFORMATION
a. Concrete Strength			
b. Reinforcement Type			
c. Structural Steel Strength			
d. Dimensions		[redacted]	[redacted]
e. Backfill Properties	[redacted]		
f. Foundation Properties	[redacted]		

1. We certify that reasonable professional skill and care has been used in this assessment to the relevant standards.

2. We cer[redacted]

SIGNED [redacted] E 2/12/03

SIGNED [redacted] E 2/12/03

FORM CBAS4

Sheet 1 of 1

NORTH AYRSHIRE COUNCIL

ROADS SERVICES

YEAR COMPLETED 2003

STRUCTURE NAME: MOUNTGLEENAN STATION

STRUCTURE REF. No.: C20/40

GRID REFERENCE 2 3 4 0 9 0 6 4 3 4 0 5

HB LOADING CAPACITY REPORT

(1) STRUCTURAL SUB-ELEMENT	(2) FACTORS AFFECTING STRENGTH	(3) HB CAPACITY	(4) CRITICAL LOADING ARRANGEMENT
ARCRNG	OTHERR	13 * 0	
		*	
		*	
		*	
		*	
		*	
		*	
		*	
		*	
		*	
		*	
		*	
		*	
		*	
		*	
		*	
		*	
		*	
		*	
		*	
		*	
		*	
		*	
		*	
		*	
		*	
		*	
		*	
		*	
		*	
		*	
		*	

SIGNED [redacted] DATE: 2/12/03

SIGNED [redacted] DATE: 2/12/03